

Technical session

Reference Board 12V/1kW fan-less PSU for Outdoor 5G Edge Computing

REF_1KW_PSU_5G_GAN and REF_1KW_PSU_5G_SIC

Telecom Rectifiers in 5G Outdoor Small Cell and Mobile Edge Computing ecosystem

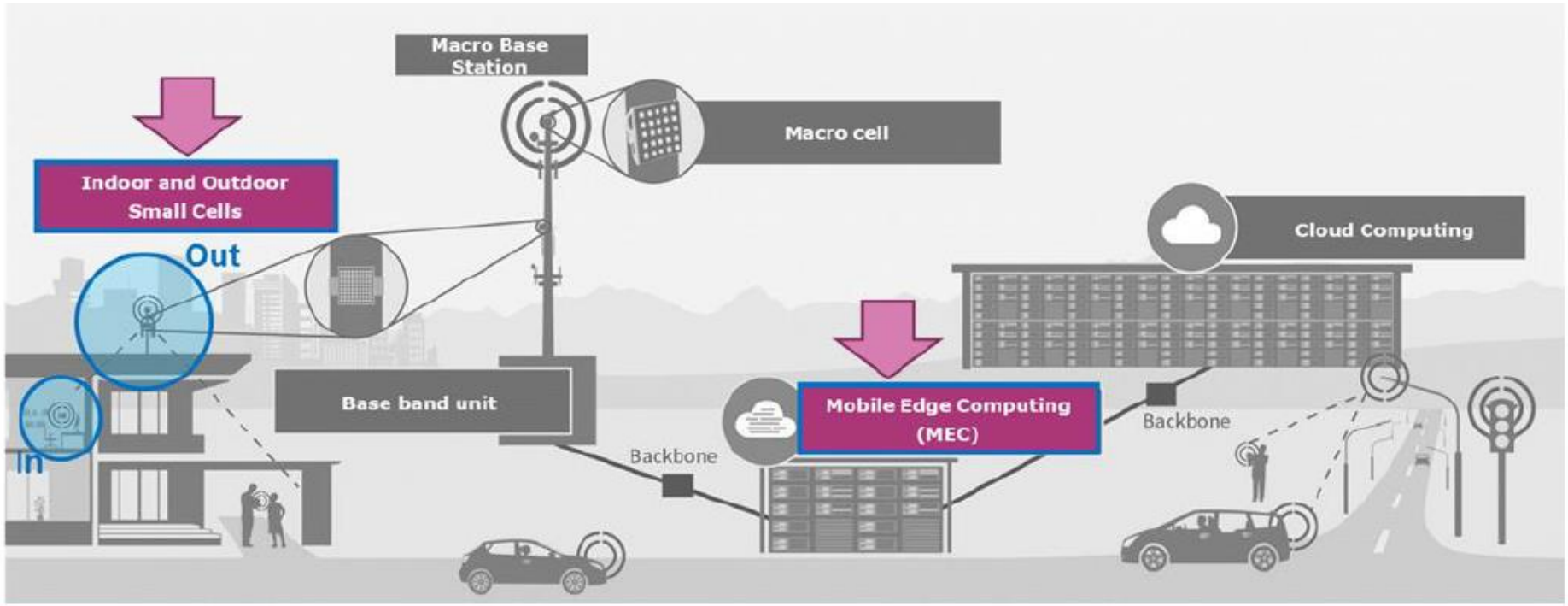

- Mounted close to the telecom equipment on a pole or wall
- Compact size & low profile
- Outdoor harsh environmental conditions





(sources: HIRO EMDC & Supermicro outdoor edge systems)

REF_1KW_PSU_5G_GAN and SIC addressing 5G Small Cells and Edge Computing markets

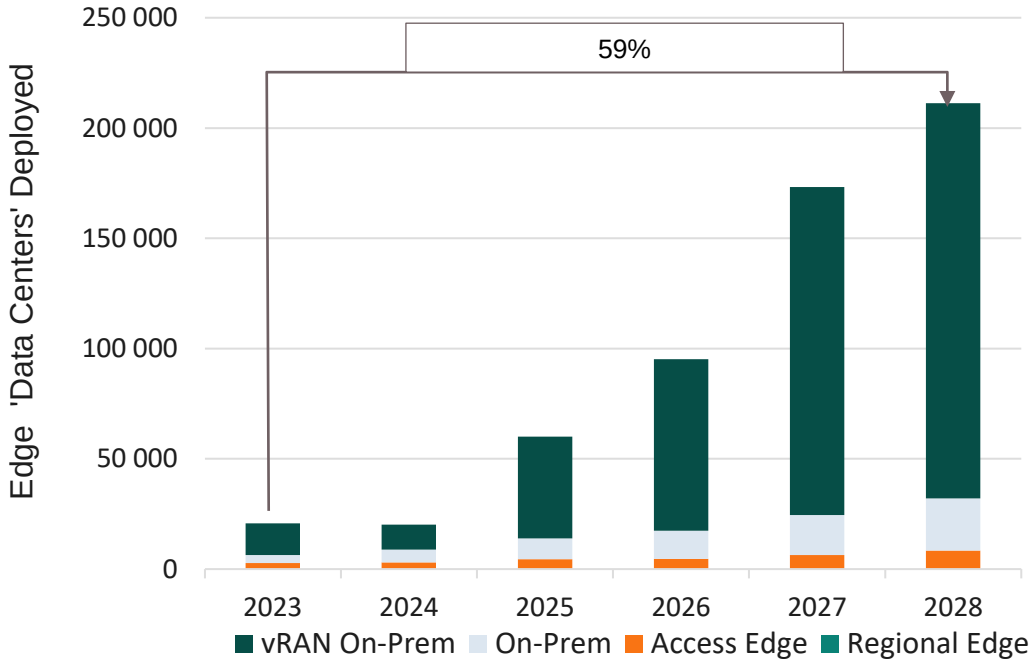

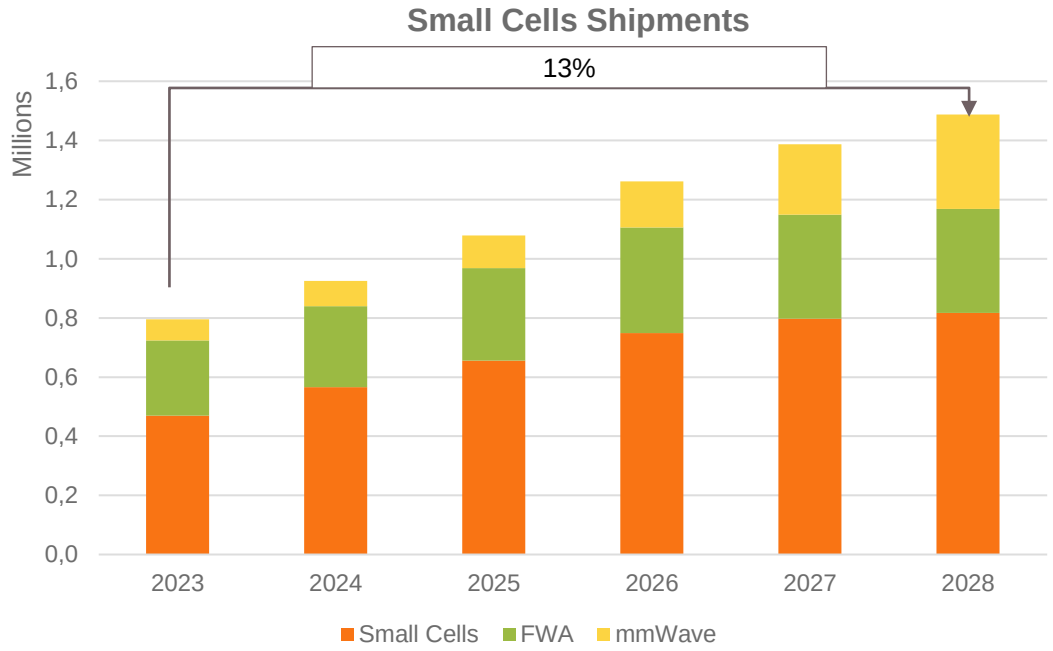

- **Regional Edge:** Mobile Edge Computing (MEC) site located in metro area (20-100 servers per site)
- **Access Edge Data Center:** MEC edge cloud location closer to RAN aggregation sites (4-8 servers per site) (commonly called "far edge")
- **On-Prem:** MEC location residing on-site at enterprise locations (1-5 servers per site) and is typically not open to additional enterprise customers.
- **vRAN:** ‘on-prem data center’ used for CU/DU (Baseband), which doesn’t have extra capacity for commercial Edge applications (1-5 servers per site).

- **Small cell:** base stations that attach to a small segment of a macro site to extend their service coverage and/or increase network capacity
- **mmWave:** small radios operating at high frequencies (typically 24-39GHz) usually deployed in dense urban areas such as downtown, stadiums, train stations, malls, and areas with high data capacity requirements.
- **Fixed Wireless Access:** base stations used to provide wireless broadband connectivity between two fixed points, for example a mobile network cell tower and a FWA device in a customer's home.

12V/1kW fan-less PSU for outdoor 5G & edge computing

1kW PSU - introduction

5G & edge computing environment

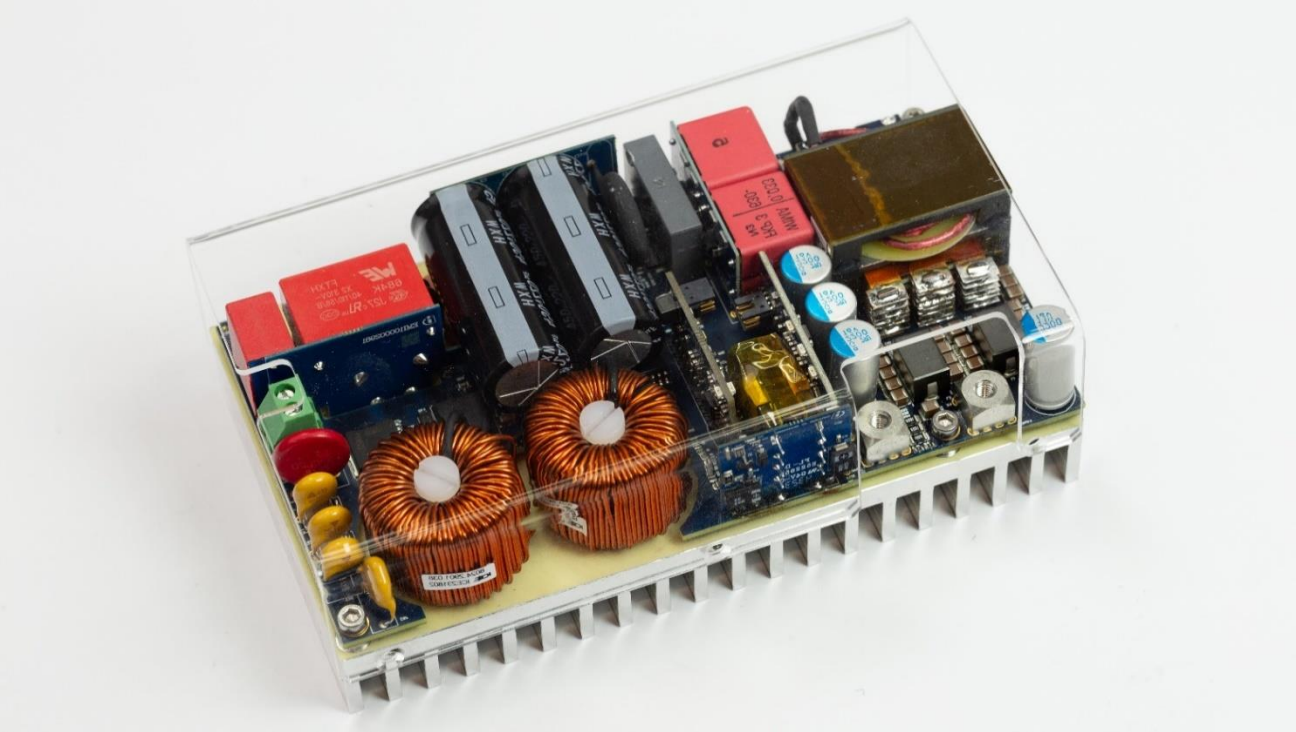

Technical details

PFC key requirements	Value
Input voltage	Nom. 100 - 230 V_{AC}
Output voltage	12 V_{DC}
Output current	83 A
Output power	1000 W
Efficiency	≥ 96% peak (HL, ML) ; ≥ 95% peak (LL,ML)
Cooling	Natural convection
Ambient Temperature	-40 to 70° C

Infineon Components

- 600V CoolGaN,650V CoolSiC, 600V CoolMOSS7,BSC009N04LSSC
- 1EDB9275F,1EDN9550,1EDB8275,1EDN8511,1EDN7550
- XMC4000 Series

Features

- CCM Totem Pole PFC
- HB LLC
- Full digital control in both PFC and LLC
- Fan-less design

Benefits

- Addressing the new requirements of outdoor Edge Computing SMPS
- Innovative fan-less cooling concept demonstrator
- Low profile
- Dimensions:80x150x27mm (WxLxH)

1kW PSU – Specifications

Parameter	Value
Nominal AC input voltage	100V-230V RMS
DC-Link output voltage	400V
DC output voltage	12V
Max output current	8.3-83A
Input current fuse	16A
Hold-up time	10ms@1000W

Requirements	Conditions	Specifications
Efficiency target	230V AC input,12V DC output 115V AC input,12V DC output	η 96% peak (HL, ML) η 95% peak (LL, ML)
Power factor and THD	100V AC to 240V AC	Lower than 10% from 20% of the load
Load transient	0A to 83A, 1A/µs 83A to 0A, 1A/µs	|ΔVout| less than 1.2Vpk
Cooling		Natural convection
EMC		EN 55022 class A with 6dB margin

1kW PSU – architecture

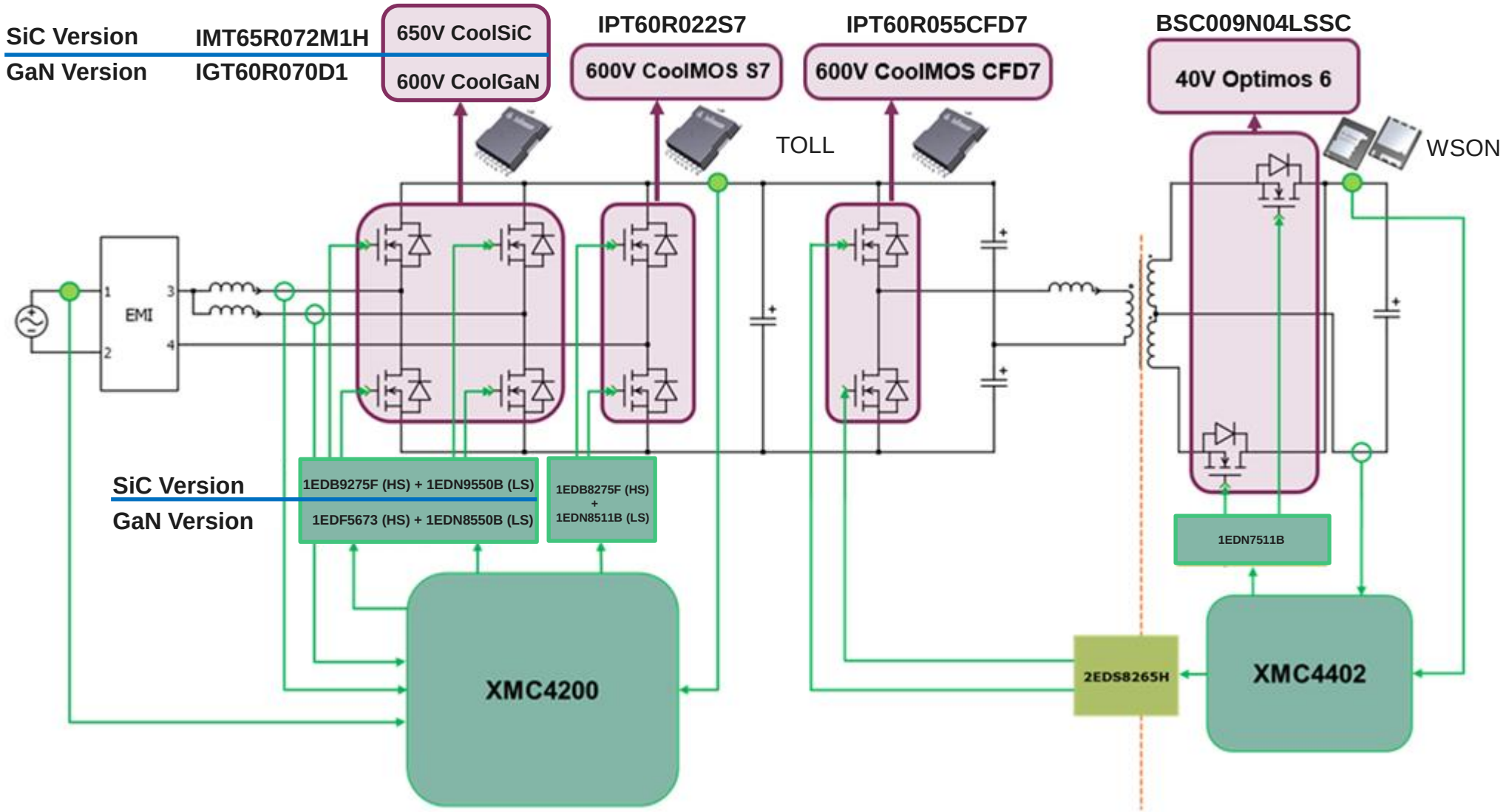

1kW PSU – hardware implementation

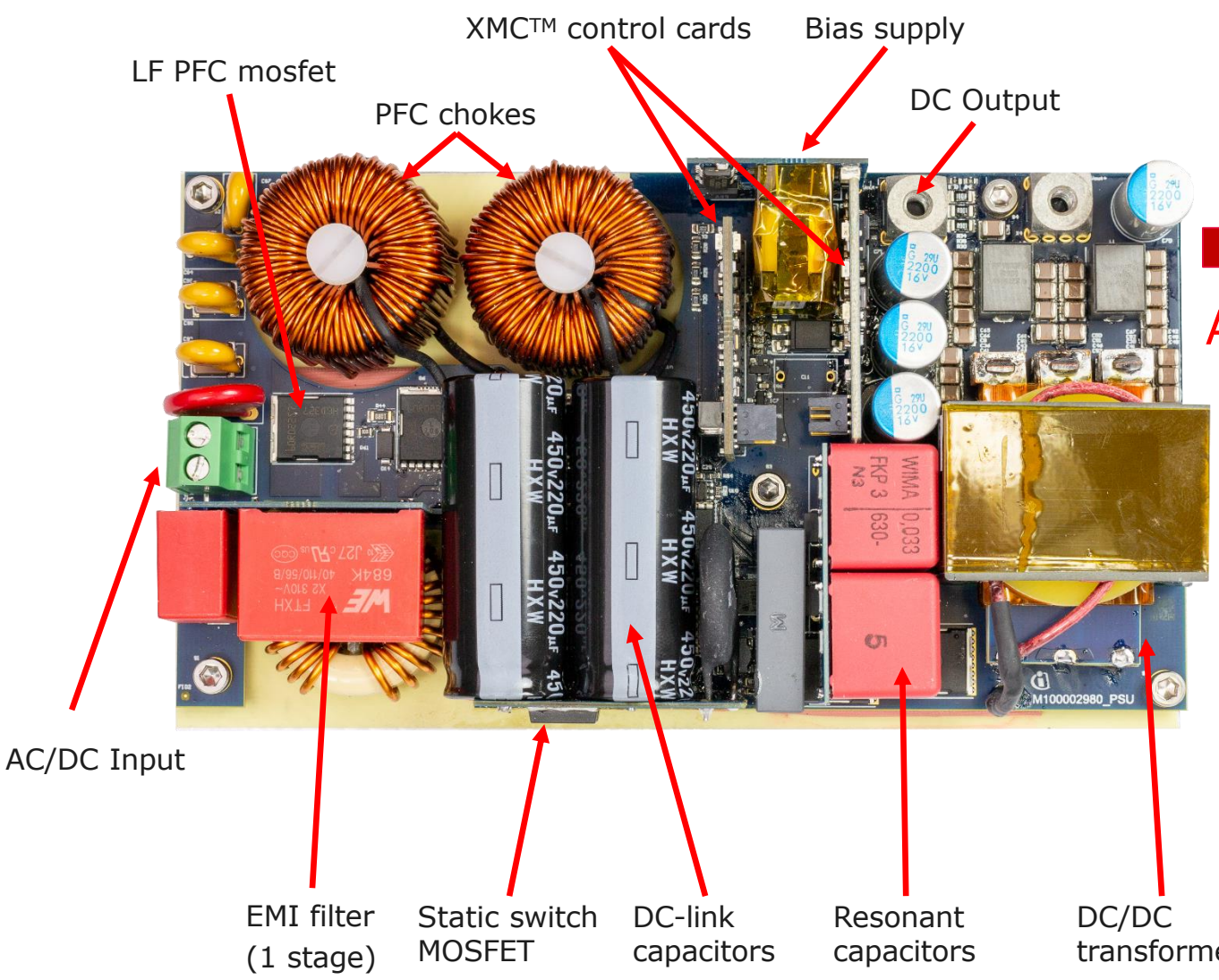

AC

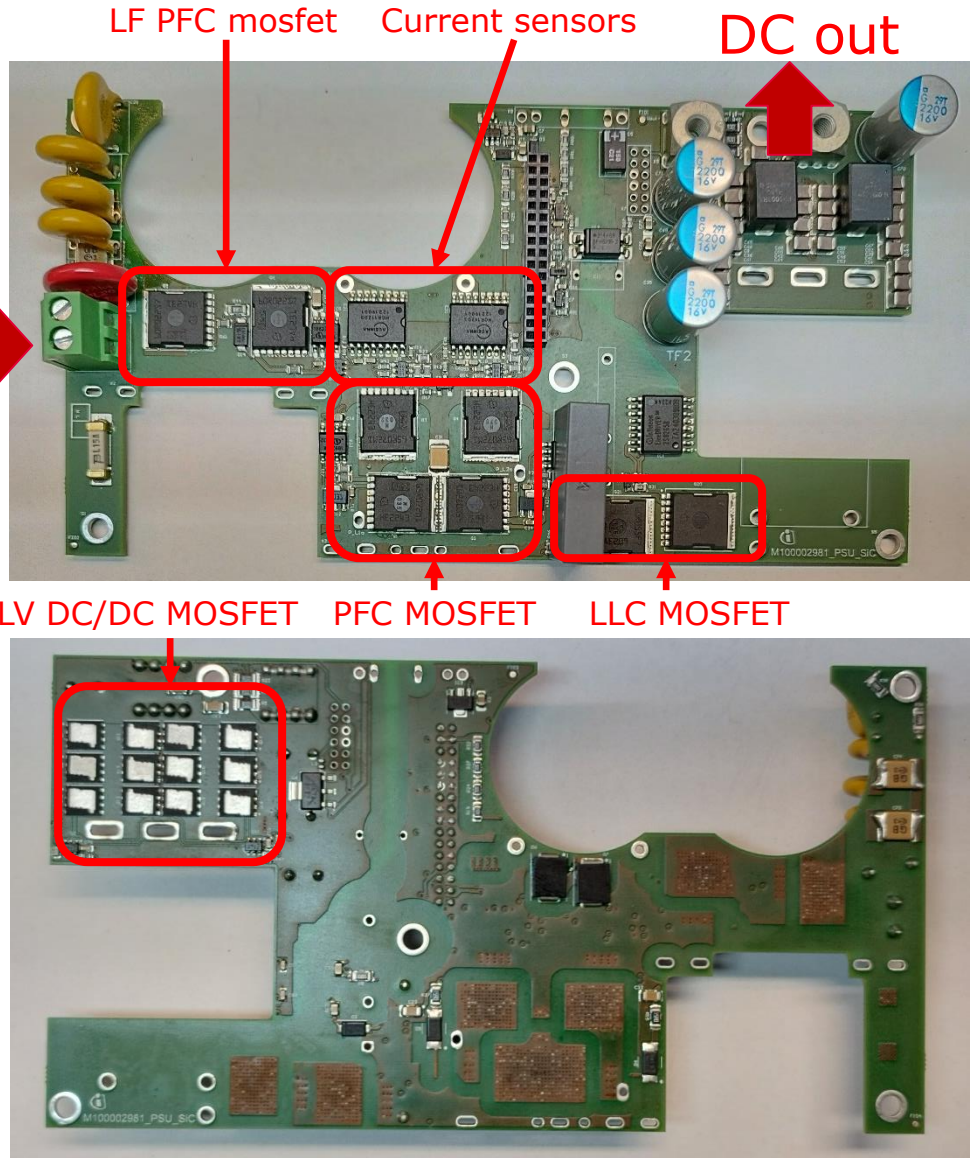

1kW PSU – Reference board with enclosure

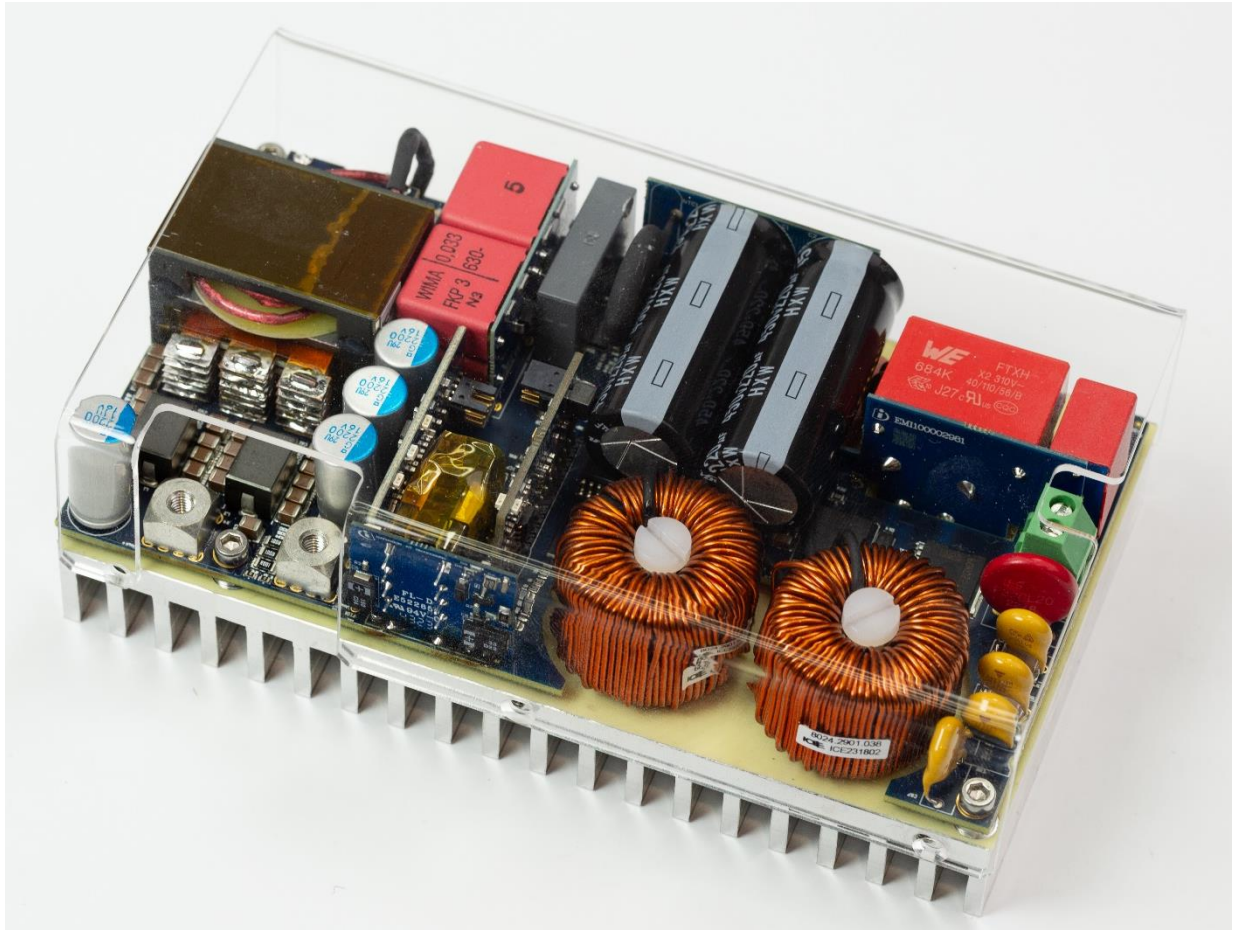

- Board with Heatsink and plastic enclosure
- Plastic enclosure for showcase
- AC/DC and DC-DC connectors
- Customized heatsink

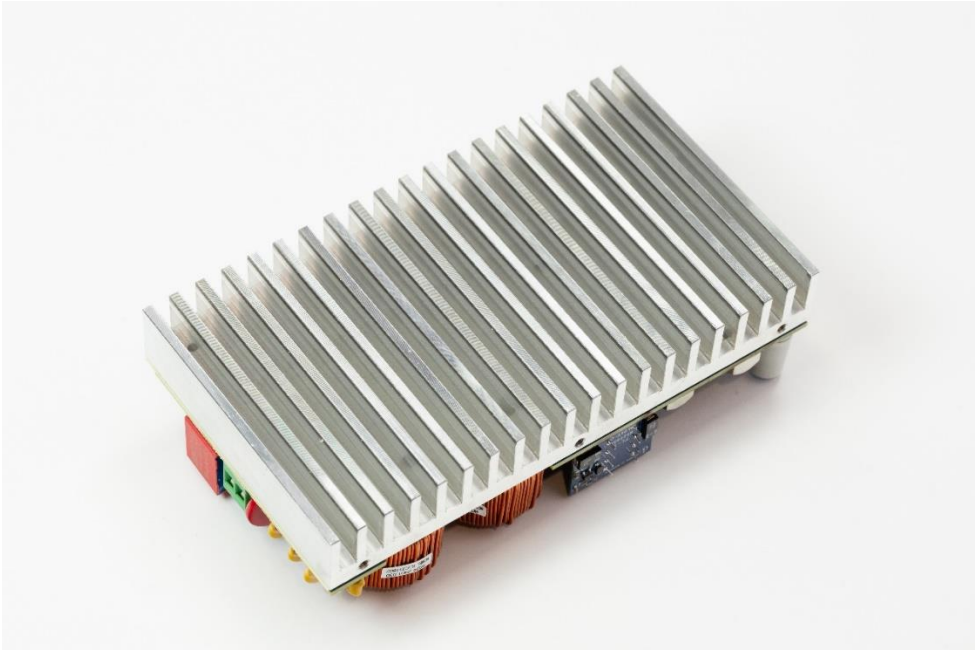

1kW PSU – Totem pole PFC

- PFC inductor current is positive and negative
- Hall effect current sensor with offset to half of XMC supply voltage

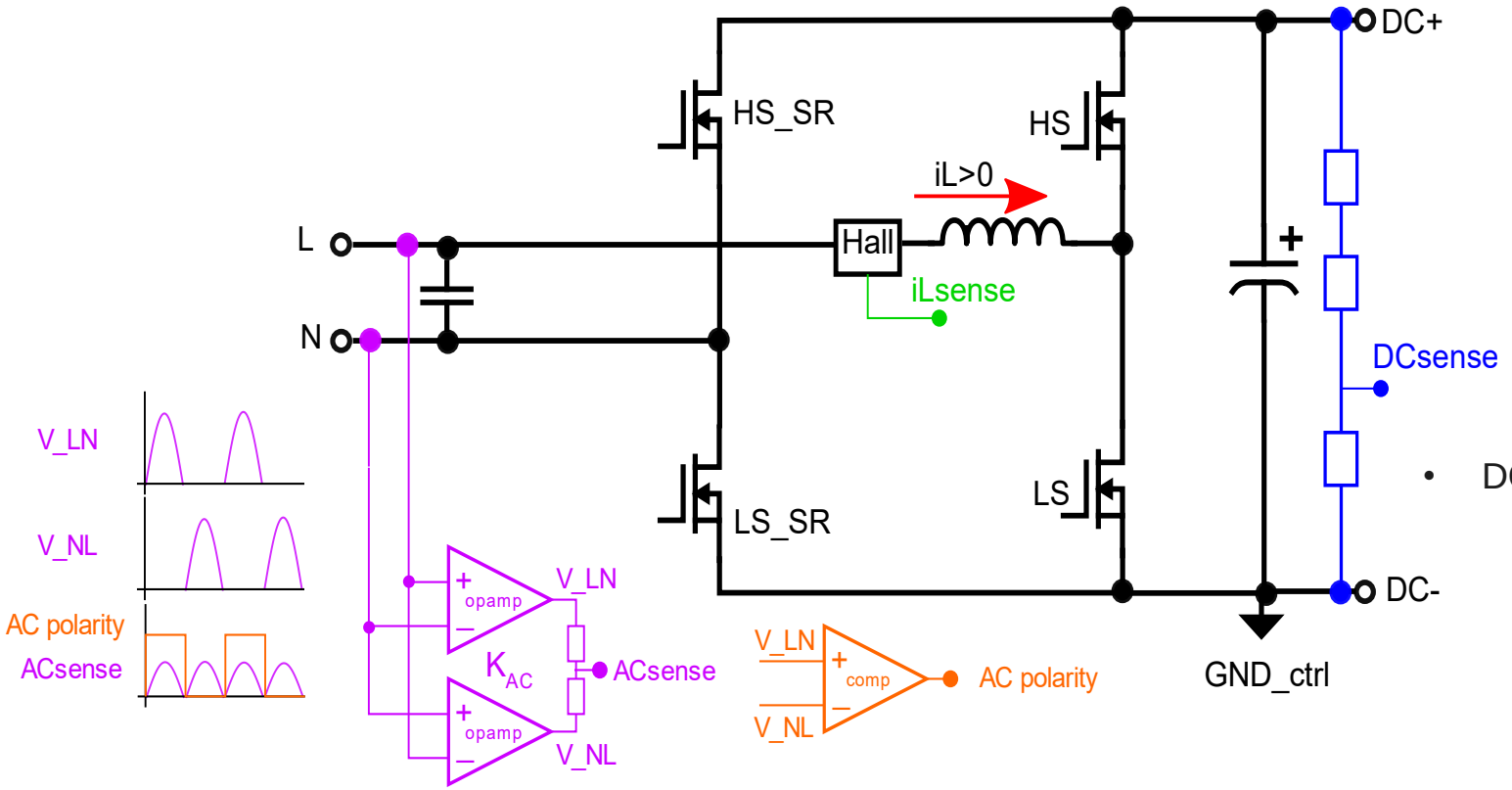

- DC-Link sensing with resistor divider

- AC line sensing: Gain + rectification
- Polarity detection required

1kW PSU – Control structure/block diagram

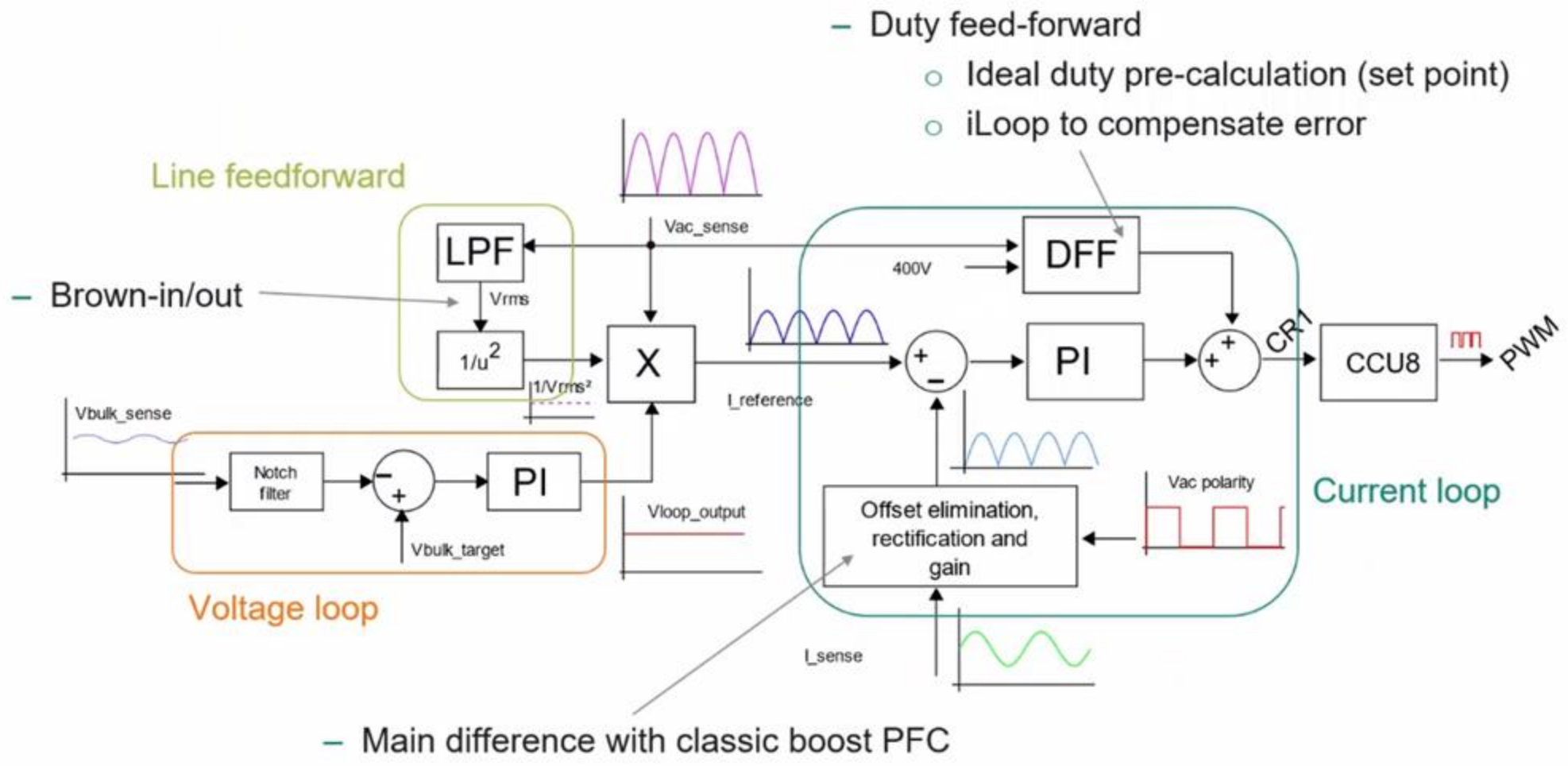

1kW PSU – PFC choke design

Material: CH270060GTE18
Number of turns: 90
Wire used: AWG 18 (1.1 mm diameter)
Max height: 26mm
Resulting inductance is: 1mH

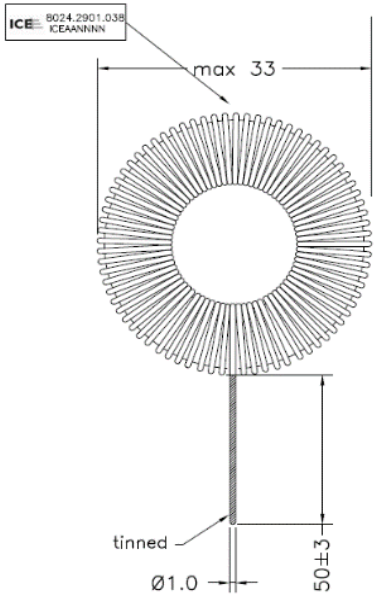

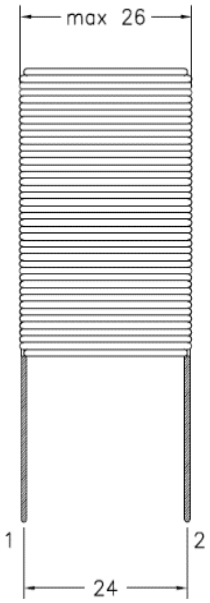

A

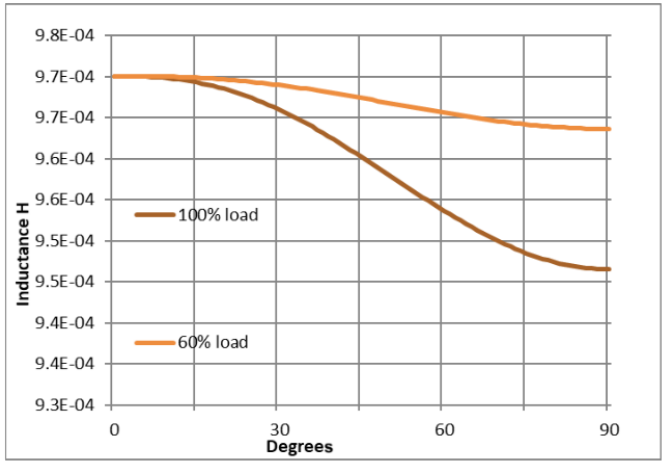

B

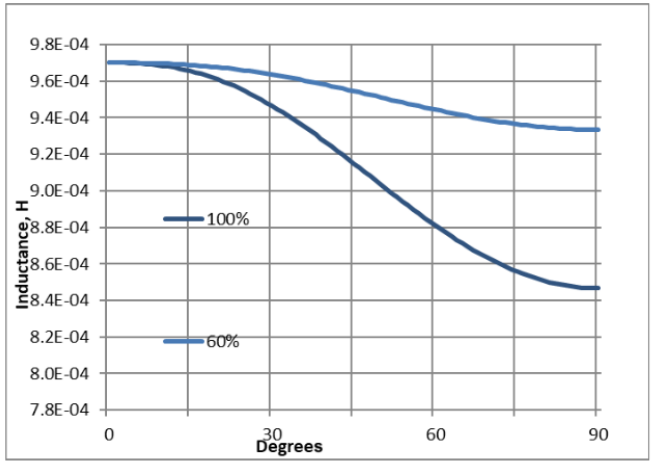

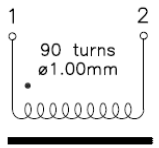



1kW PSU – CoolSic high frequency driving stage with bootstrapping

- Proposal: include linear regulator (LDO) to eliminate modulation
- Modifications in respect to classical bootstrapping supply for high-side driver
  - 24V generated from bias voltage (voltage doubler – A)
  - Only 12V bias required (as CoolMOS™ driving)
  - LDO for low-side (LS) 18V driver supply – B
  - LDO for high-side (HS) 18V driver supply – B

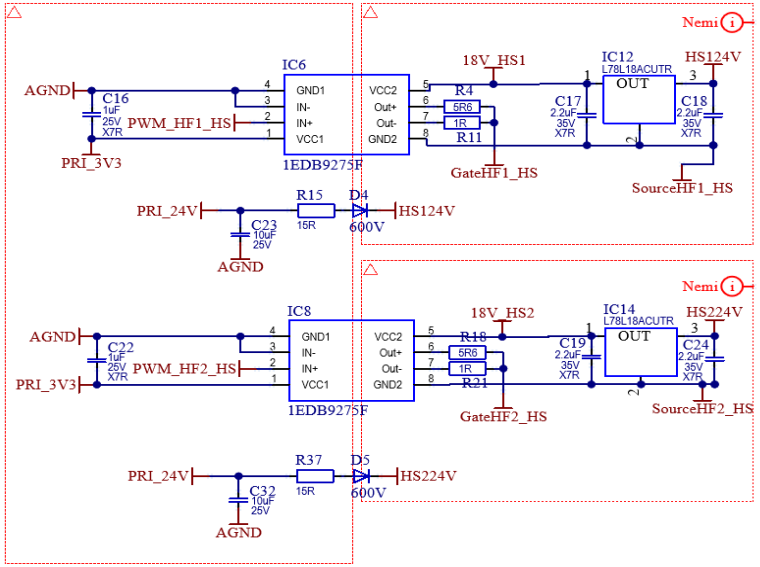

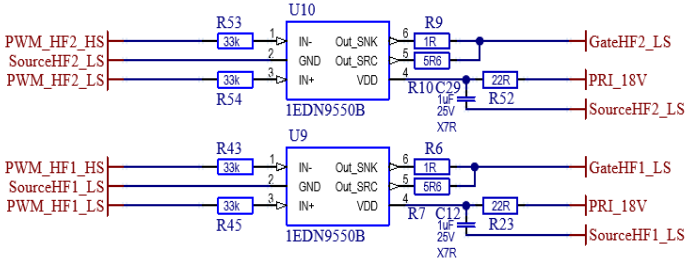

A

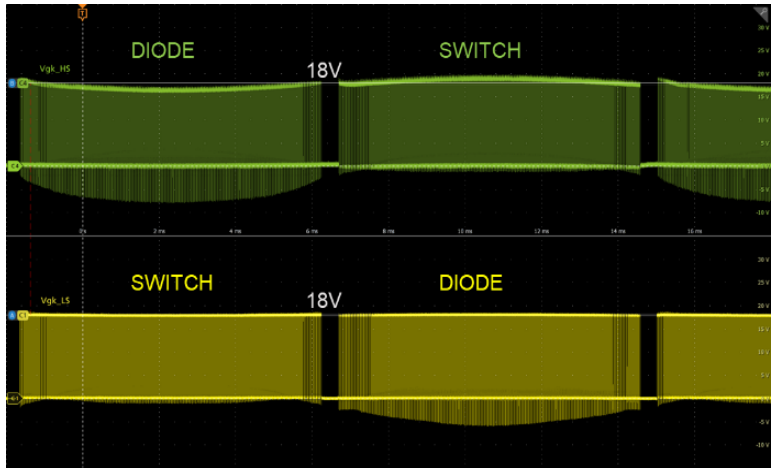

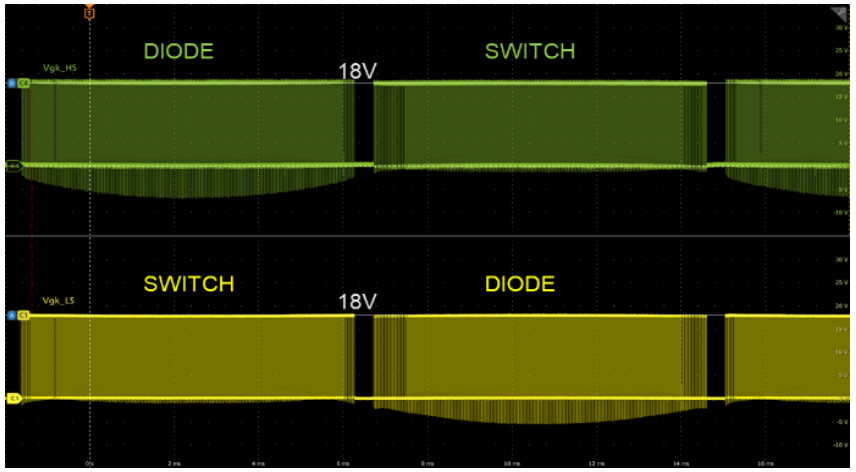

B

1kW PSU – CoolGaN high frequency driving stage

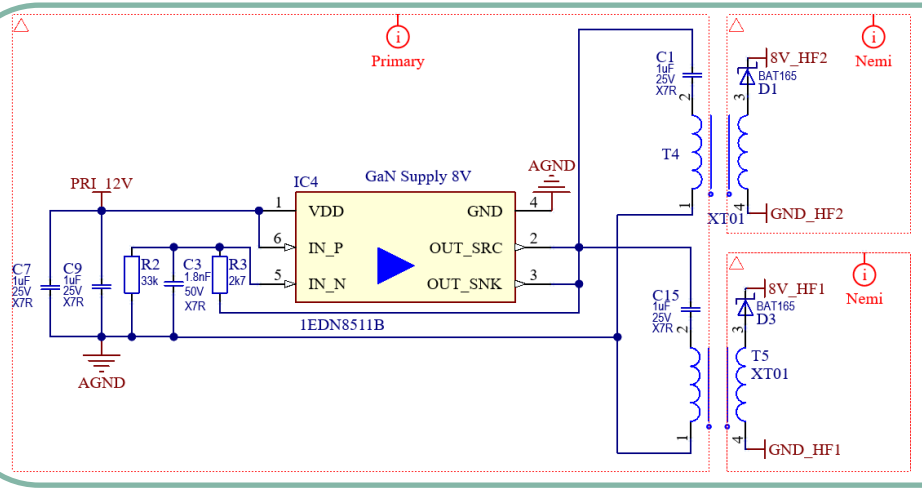

High side bias supply

- Isolated bias supply using 1EDN8511 as oscillator
- XT04 by ICE transformer for isolation

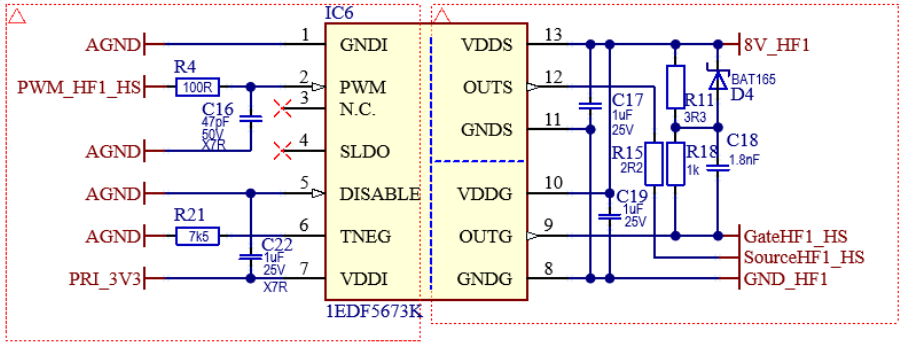

High side driving

- 1EDF5673K
- External RC network

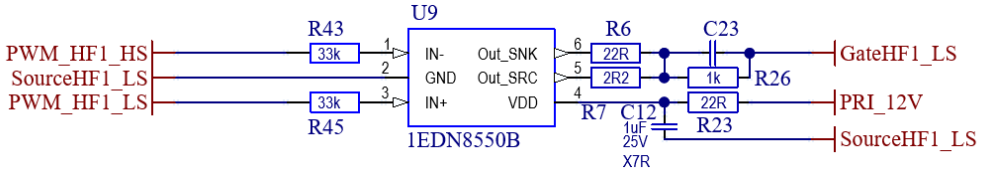

Low side driving

- 1EDN8550
- External RC network

1kW PSU – CoolGaN high frequency driving stage

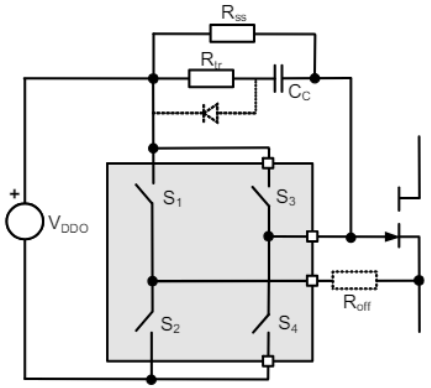

a)

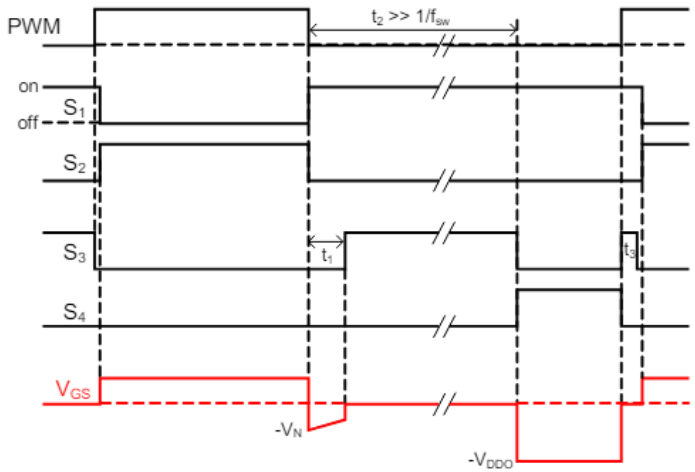

b)

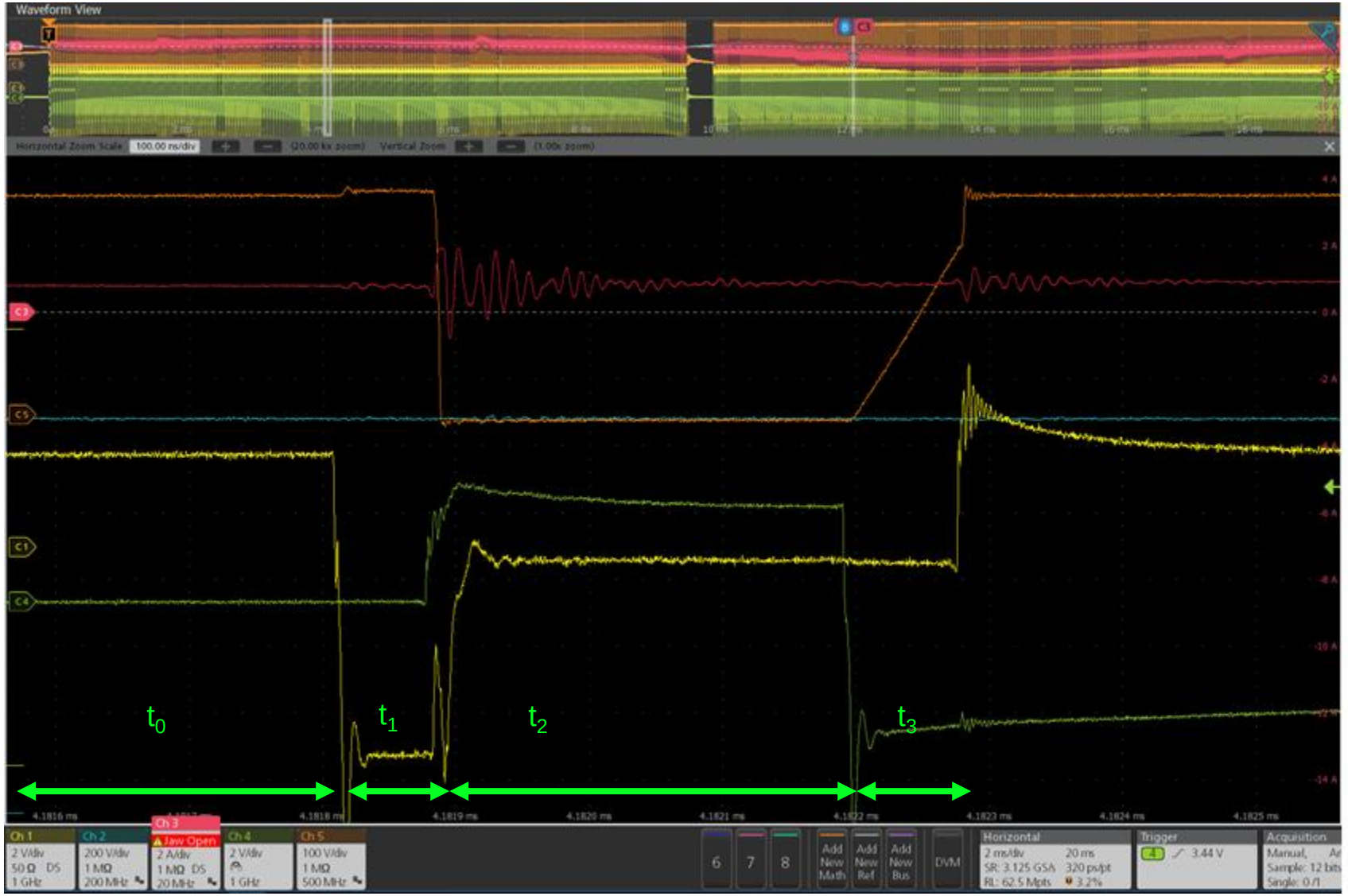

1kW PSU – CoolMoS LLC driving

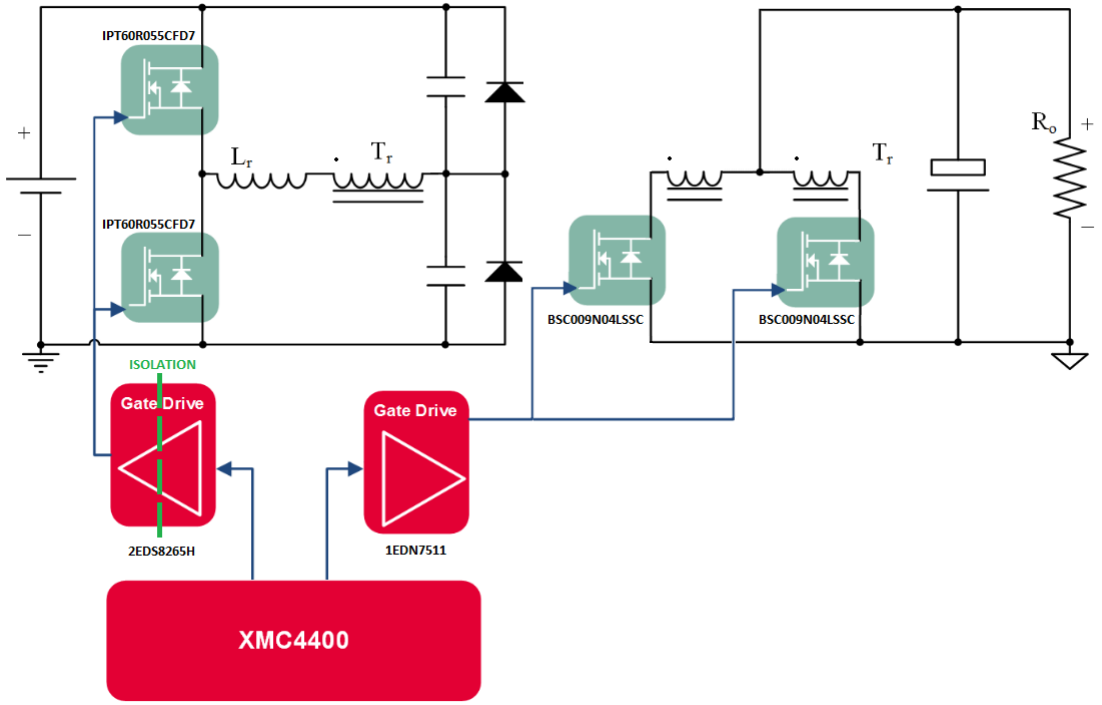

- **LLC primary mosfets:** IPT60R055CFD7 (TOLL package)
- **Secondary mosfets:** 12xBSC009N04LSSC

- **Primary mosfet driving**:
  - 2EDS8265H for safety isolation
  - Bootstrapping tecqnique for HS
- **Secondary mosfet driving: 1EDN7511B**

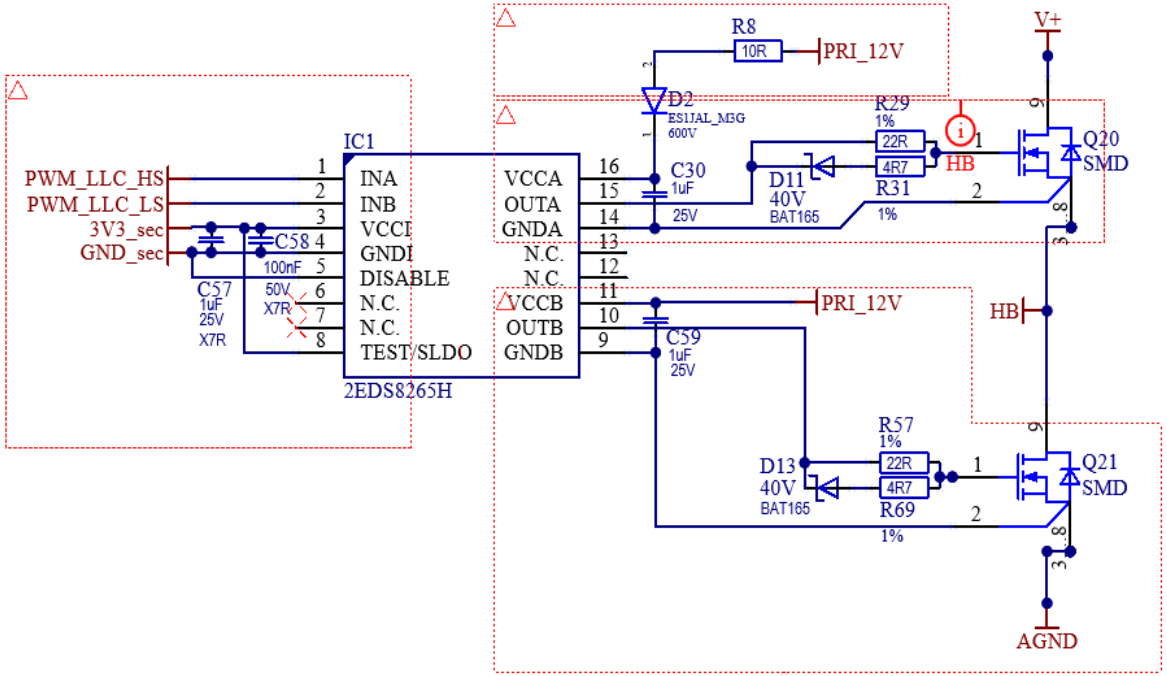

1kW PSU – Simplified structure of the LLC transformer

Transformer Construction			
	Kapton		0.05
	Sec_1		0.32
	Kapton		0.05
	Sec_2		0.32
	Spacer		0.15
	Kapton		0.05
	Primary		1.255
	Kapton		0.05
	Spacer		0.15
5.110	Sec_1		0.32
	Kapton		0.05
	Sec_2		0.32
	Spacer		0.15
	Kapton		0.05
	Primary		1.255
	Kapton		0.05
	Spacer		0.15
	Sec_1		0.32
	Kapton		0.05
	Gap		0.2
	Kapton		0.05
	Sec_2		0.32
	Spacer		0.15
	Kapton		0.05
	Primary		1.255
	Kapton		0.05
	Spacer		0.15
	Sec_1		0.32
	Kapton		0.05
5.110	Sec_2		0.32
	Spacer		0.15
	Kapton		0.05
	Primary		1.255
	Kapton		0.05
	Spacer		0.15
	Sec_1		0.32
	Kapton		0.05
	Sec_2		0.32
	Kapton		0.05

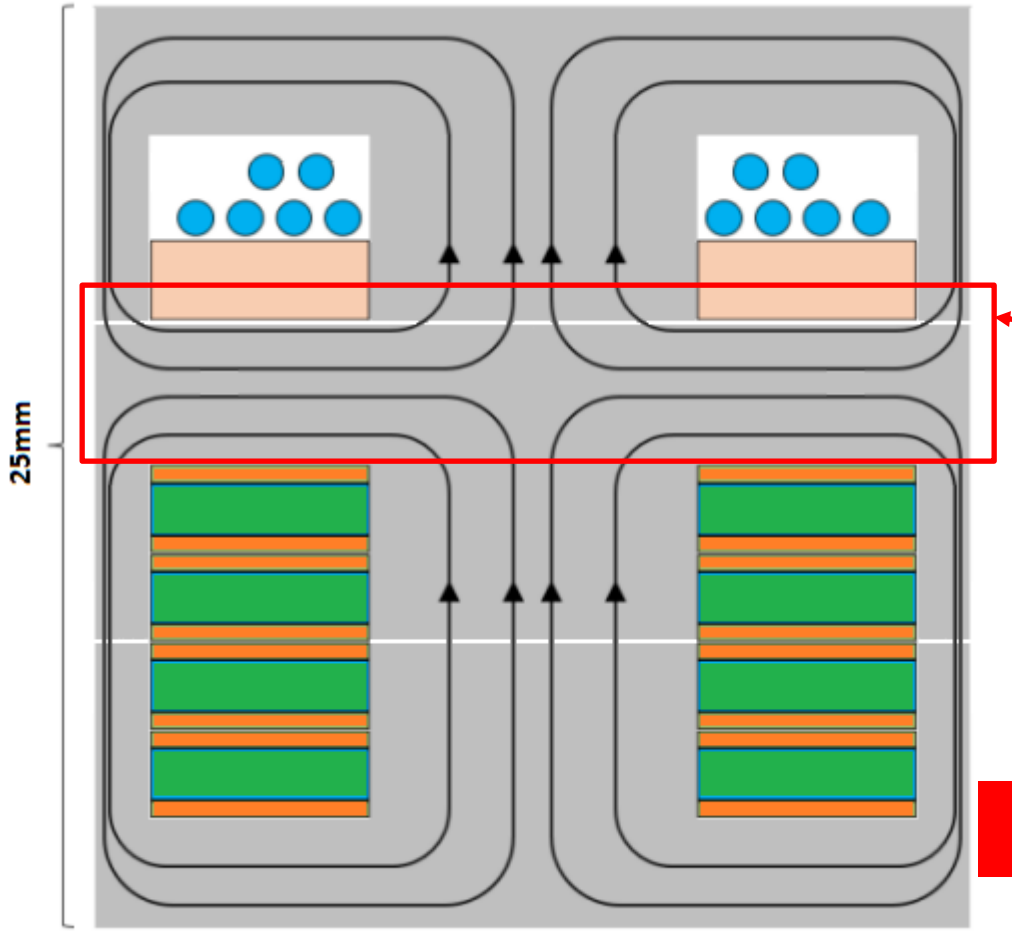

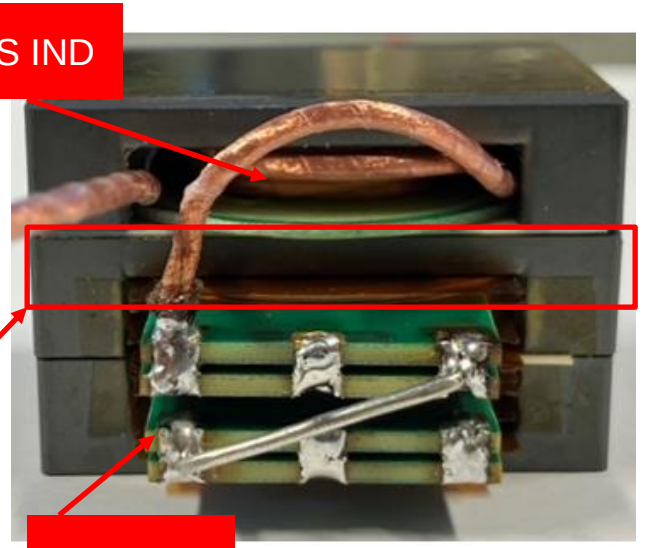

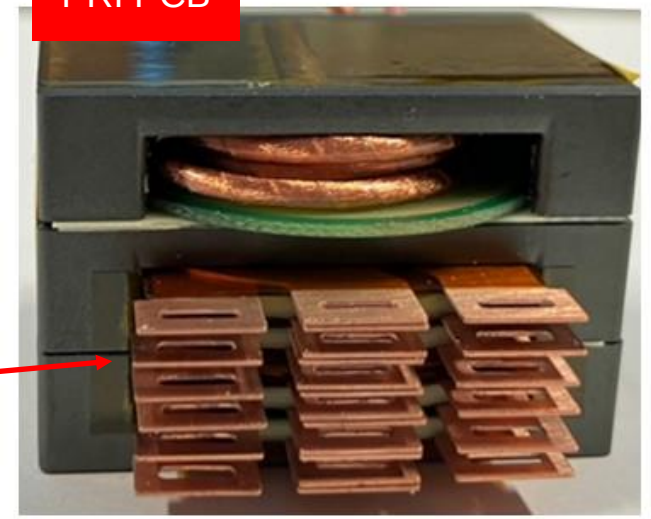

1kW PSU – Experimental Results (SiC/GaN Version)

Test: VAC = 230V RMS; Full load (FL)

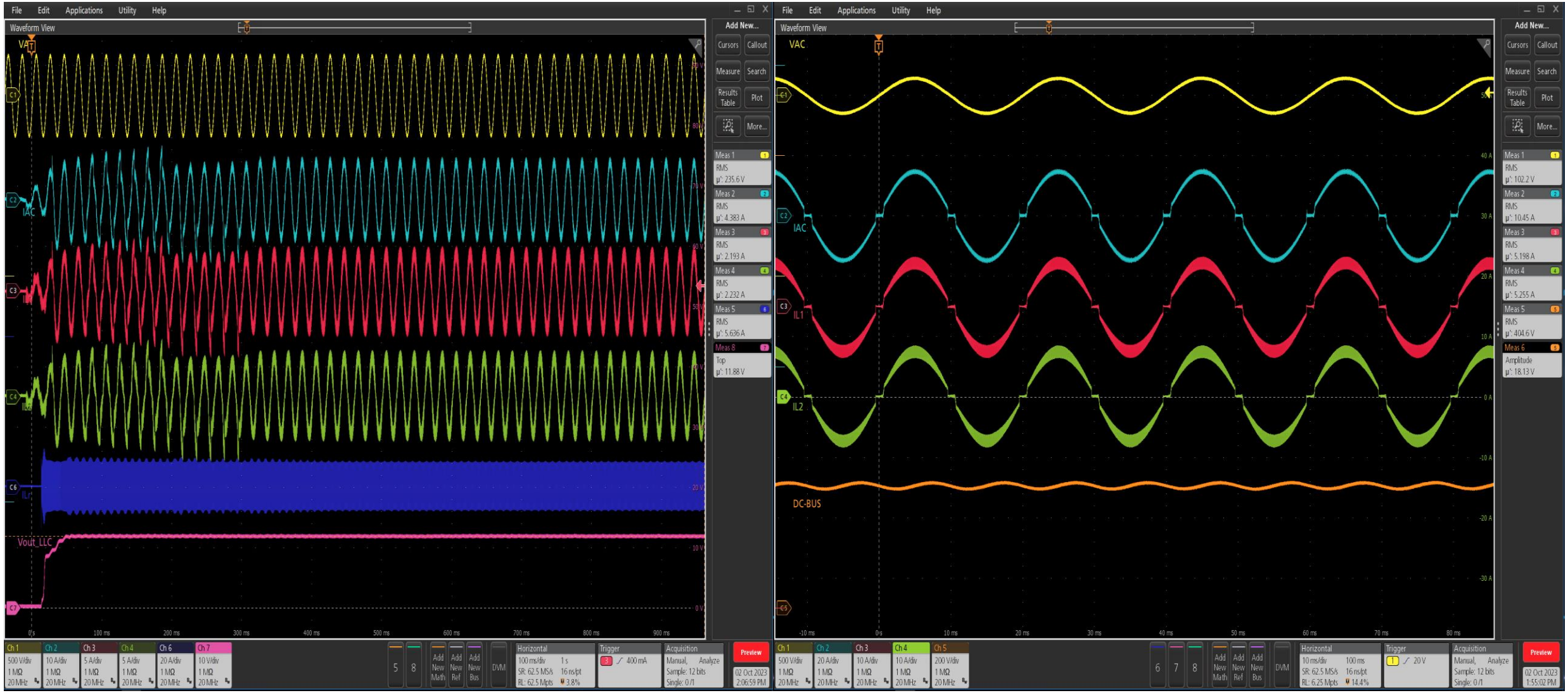

1kW PSU – Effect of the interleaving (SiC/GaN Version)

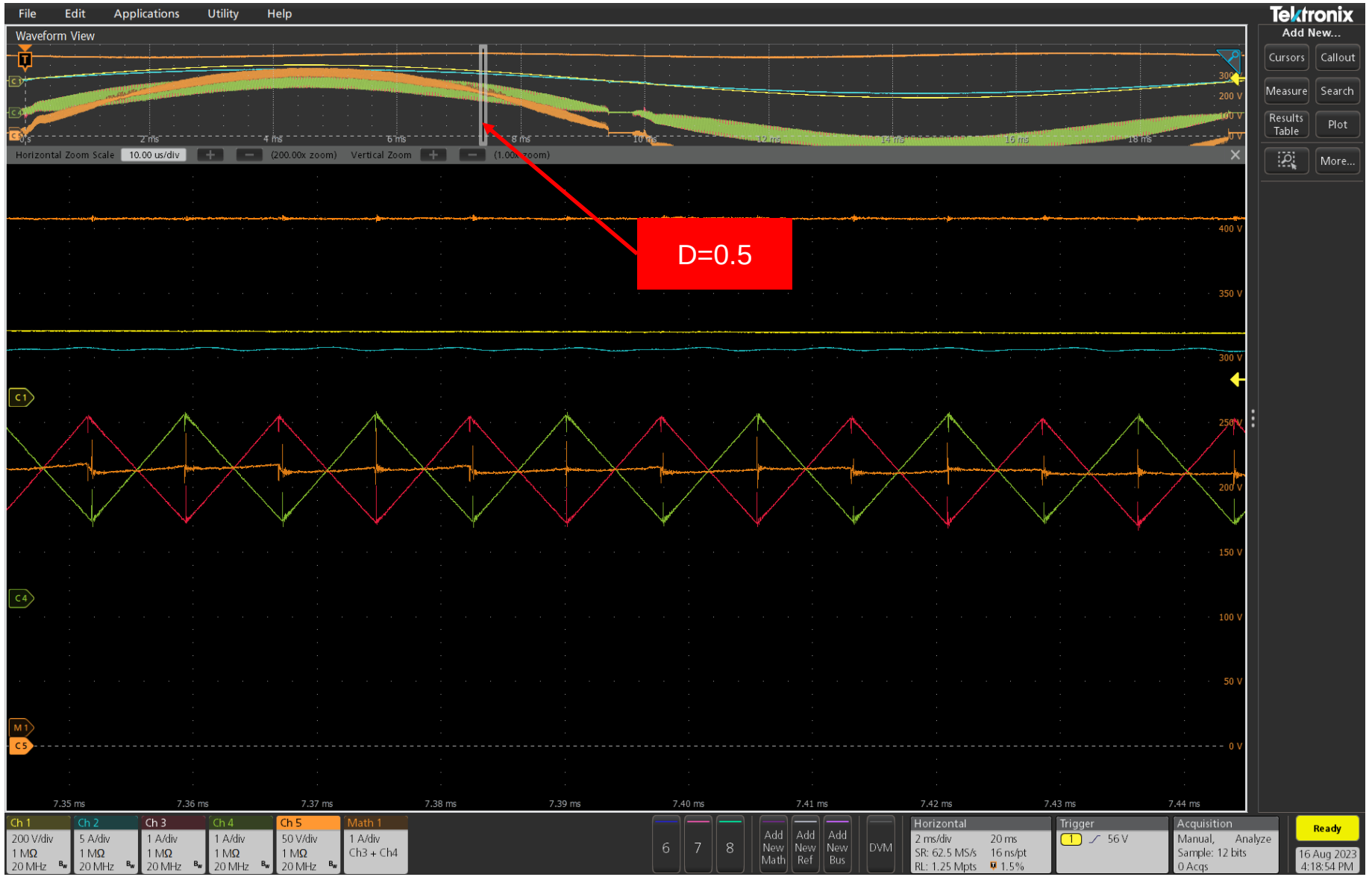

1kW PSU – LLC steady state Full Load

Primary side

Secondary side

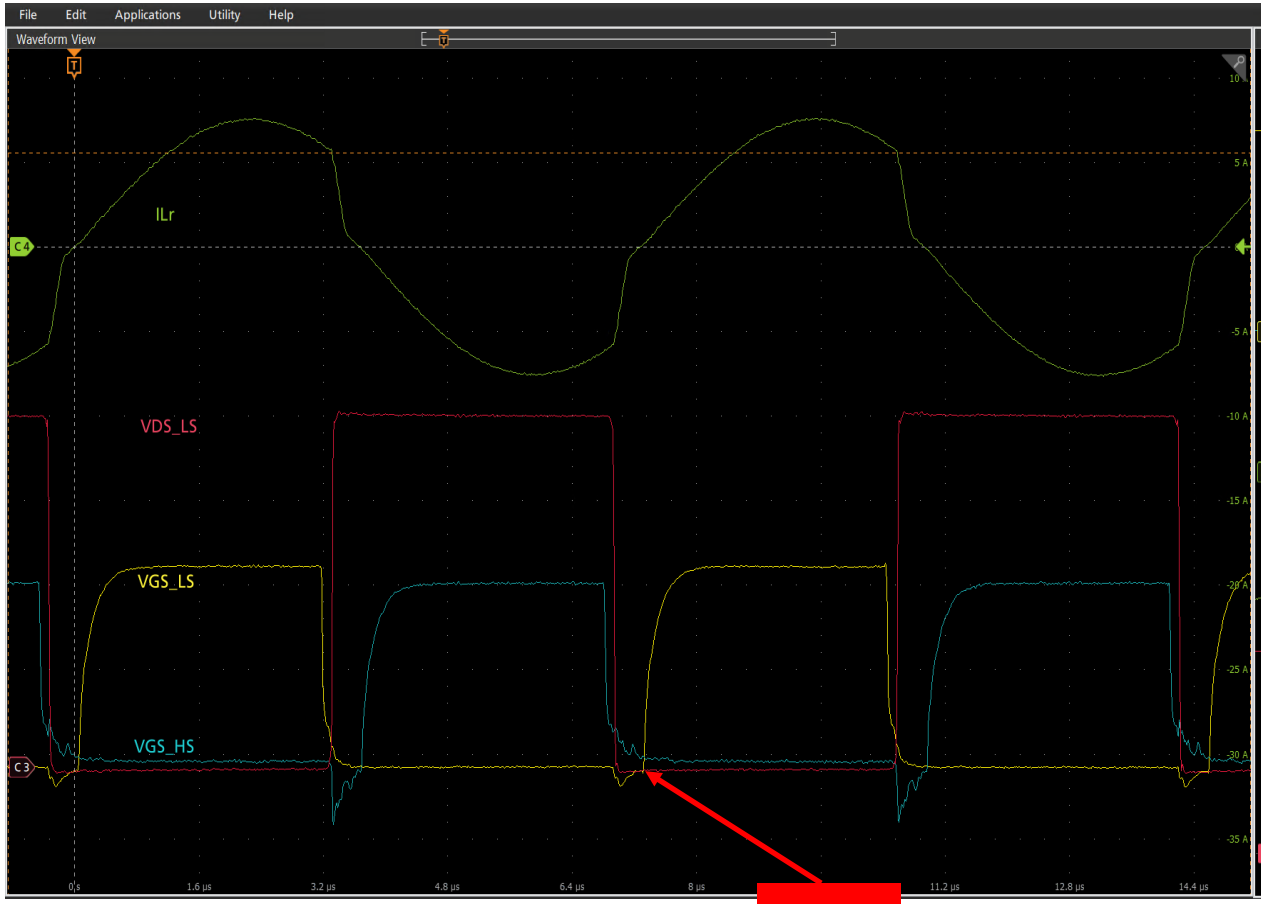

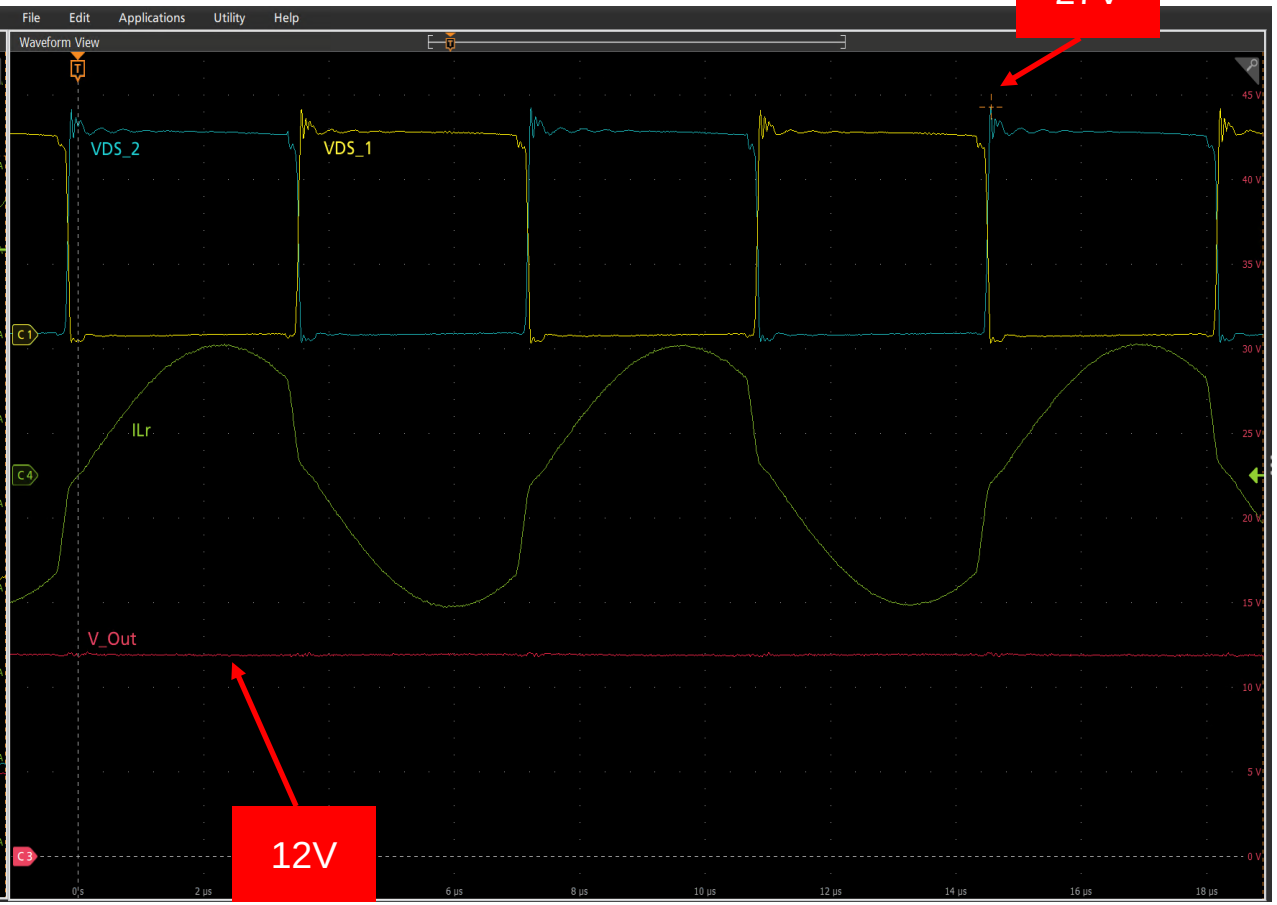

1kW PSU – Line cycle drop out (SiC/GaN Version)

Test: VAC = 230V RMS;LCDO @ 45° of input voltage, 10 times with a 100ms interval between each repetition;FL

SiC

GaN

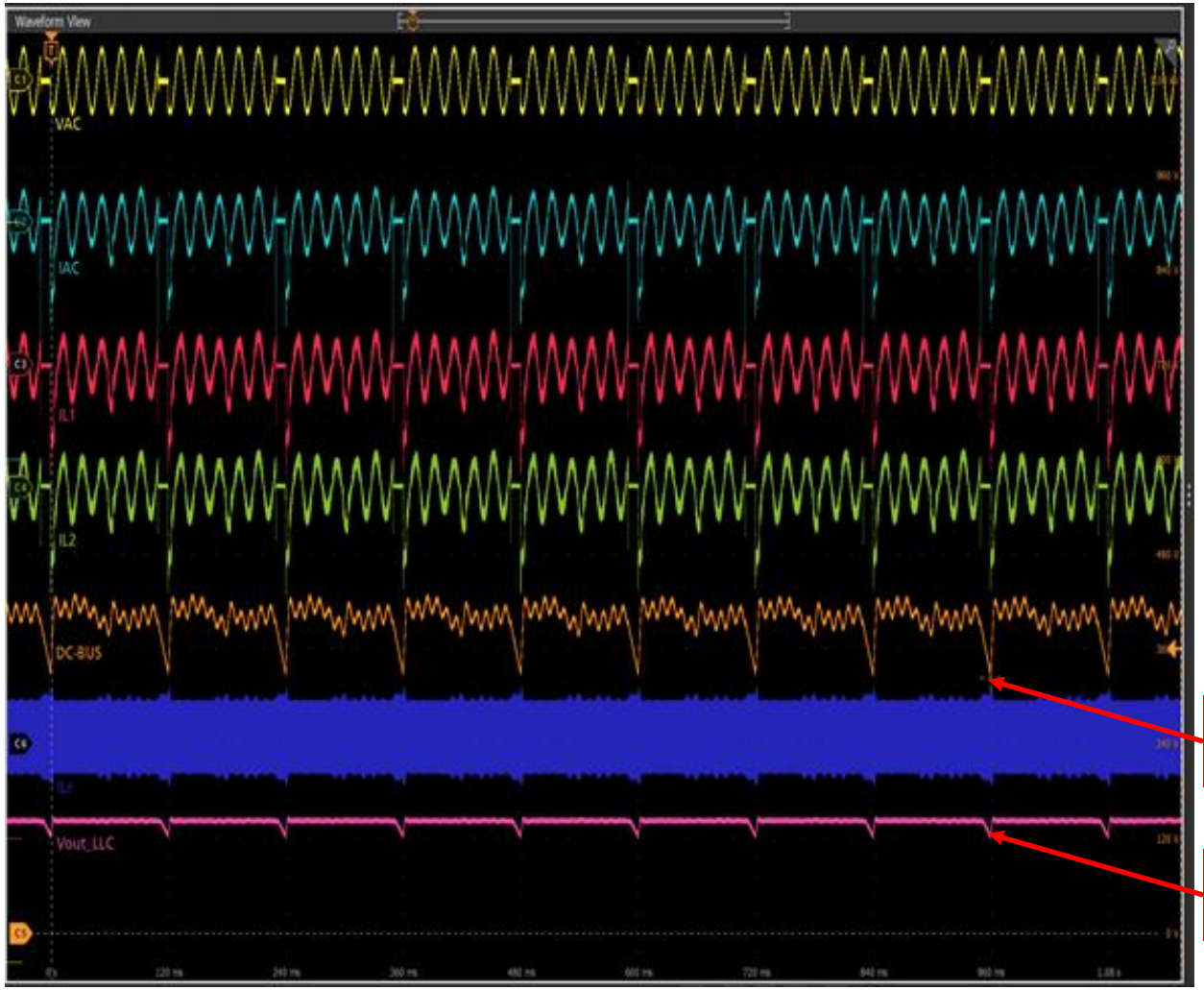

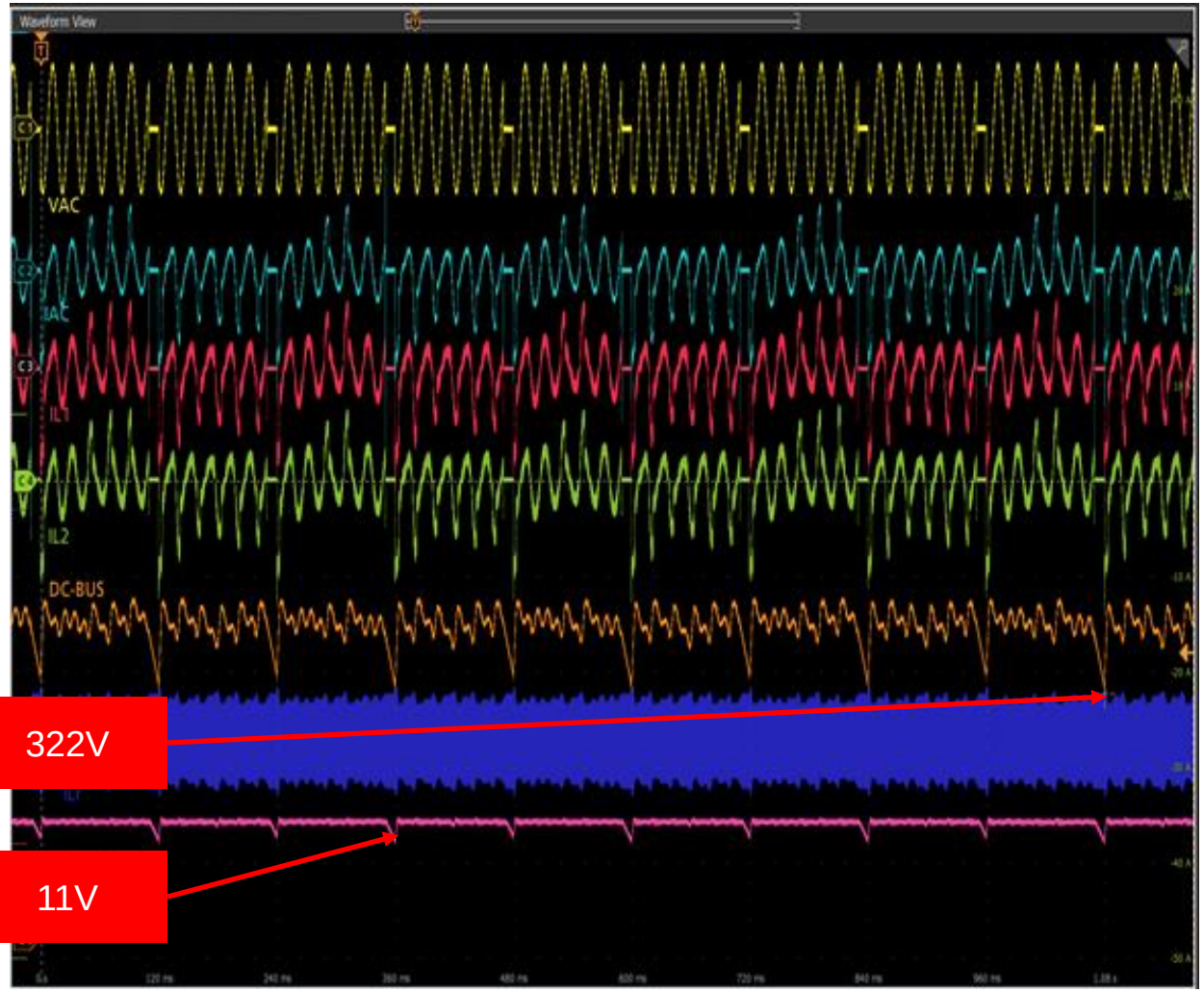

322V

11V

1kW PSU – Efficiency(SiC Version)

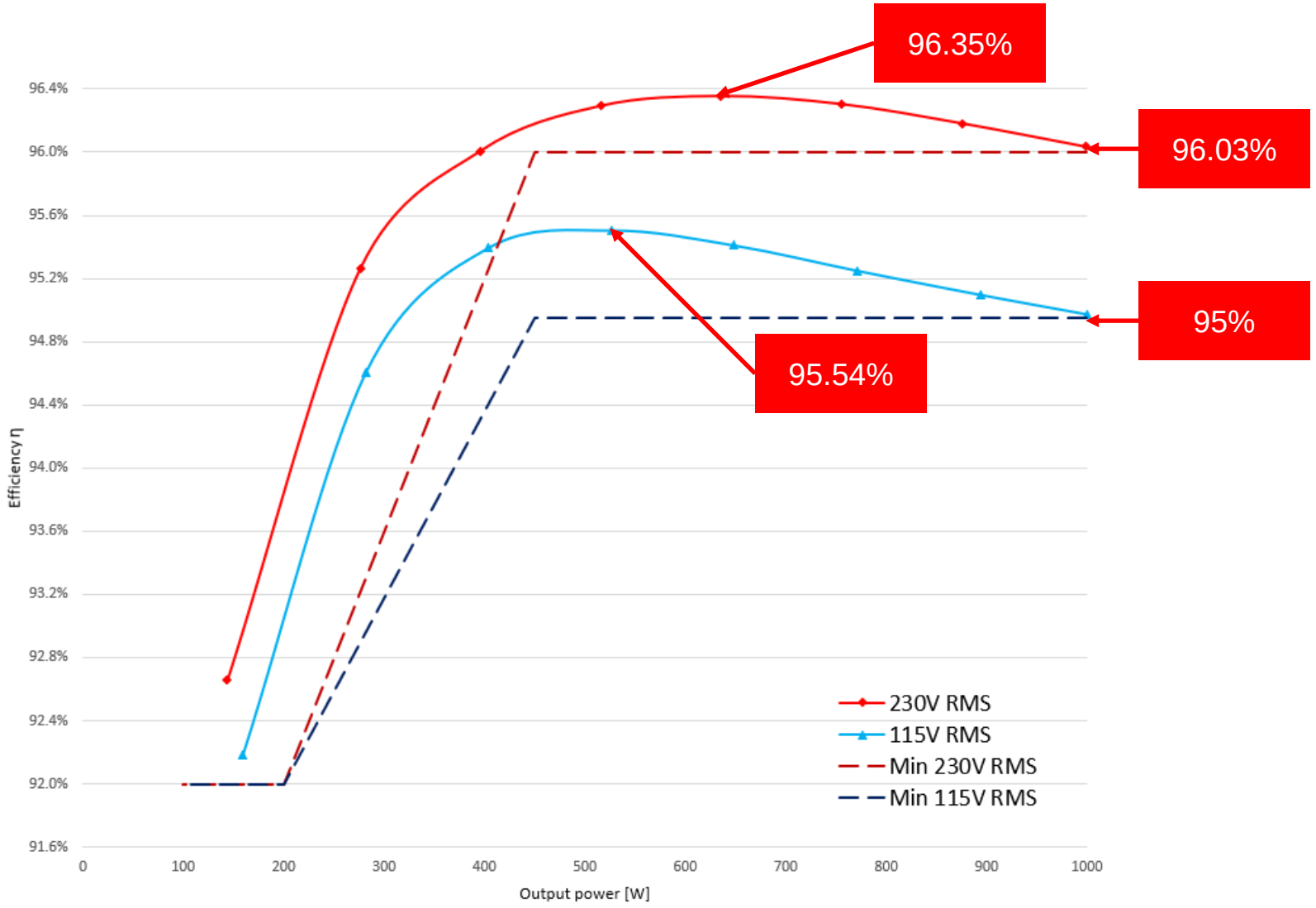

1kW PSU – Measured efficiency (GaN Version)

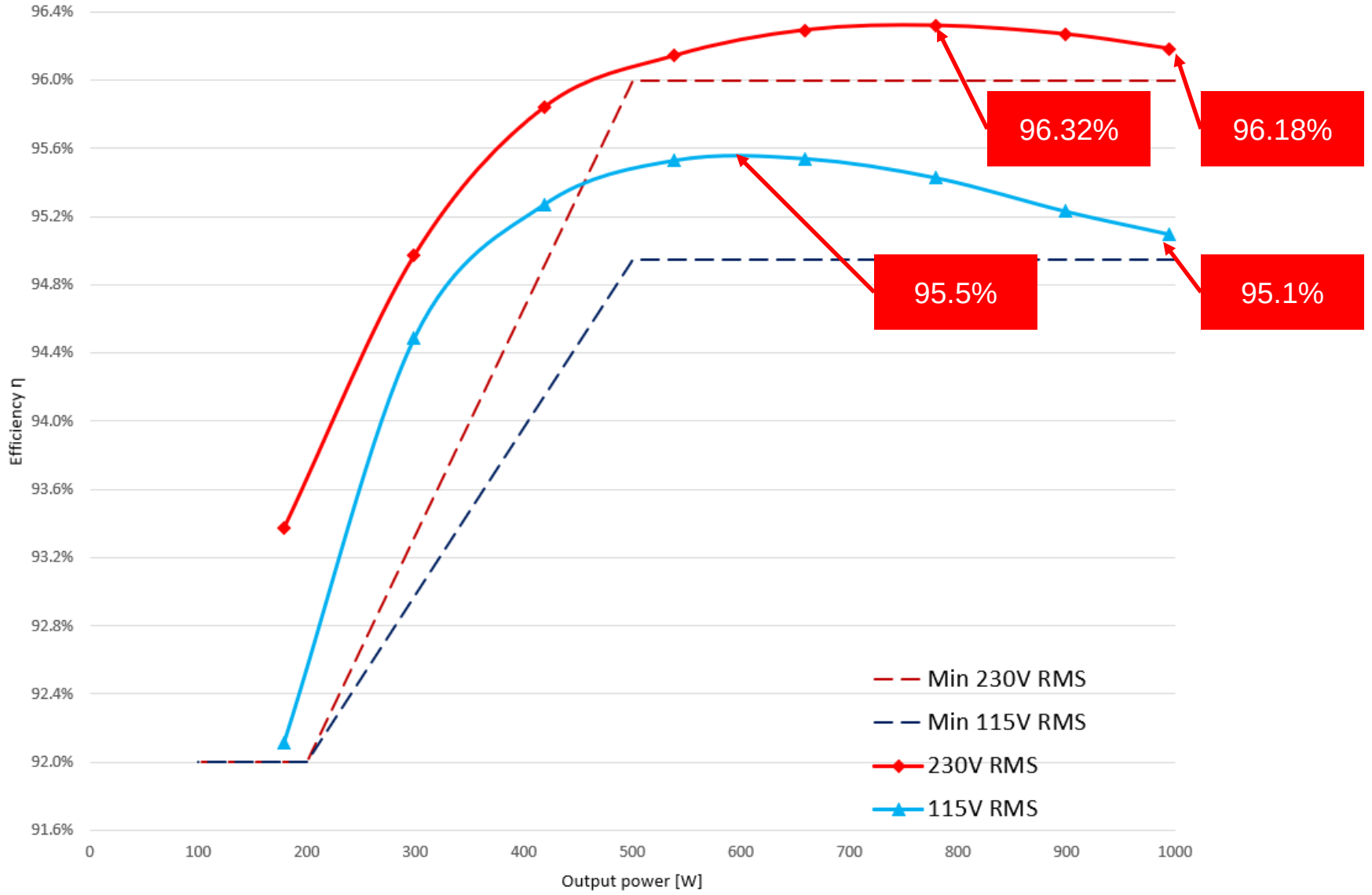

1kW PSU – Comparison

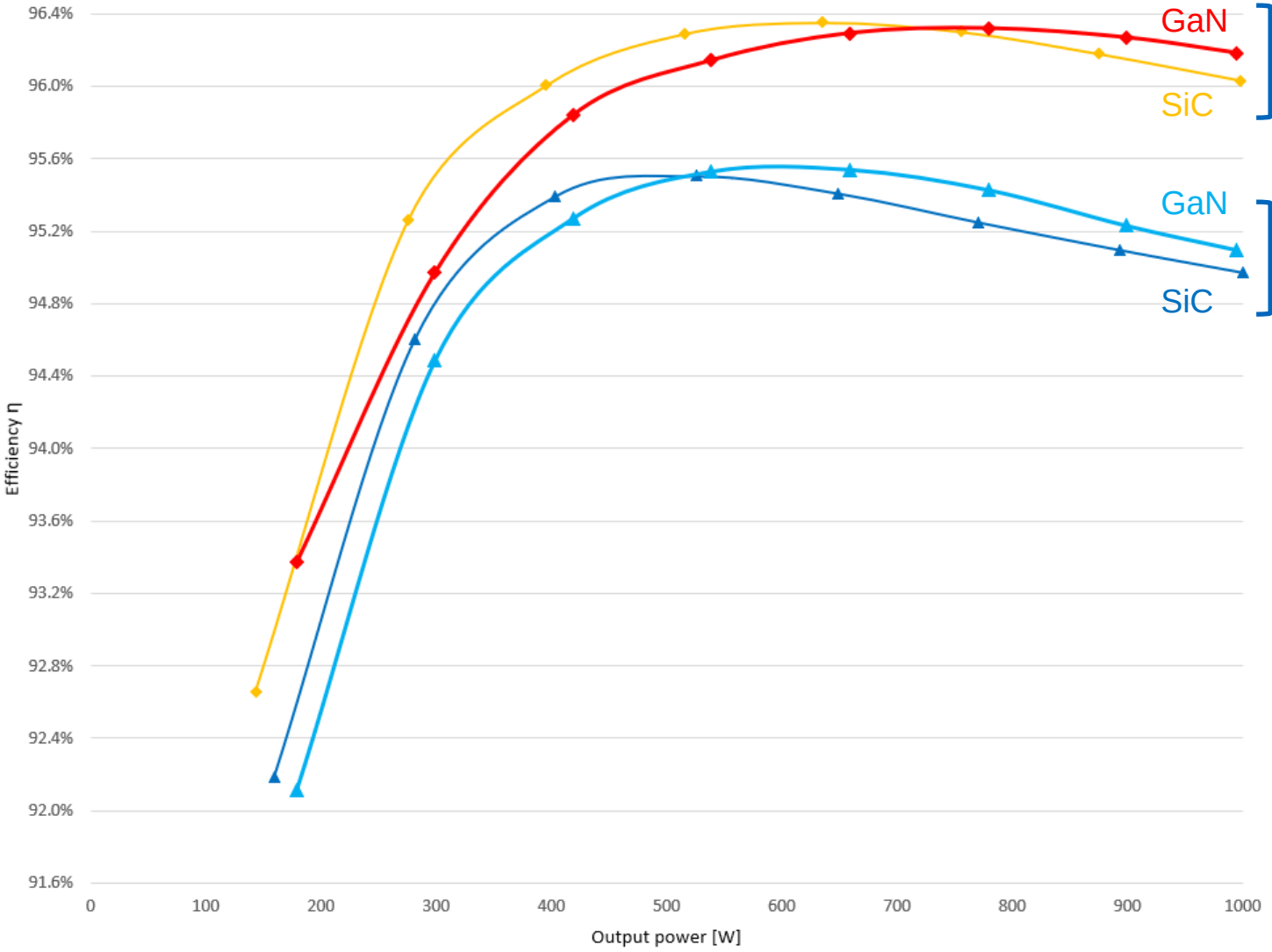

REF_1KW_SiC/GaN
230V AC

REF_1KW_SiC/GaN
115V AC

Devices used:

- IMT65R072M1H for PFC SiC: 72mΩ declared as Typical
- IGT60R070D1 FOR PFC GaN: 70mΩ declared as Max

1kW PSU – THD & Power factor & THD (SiC/GaN)

Power factor

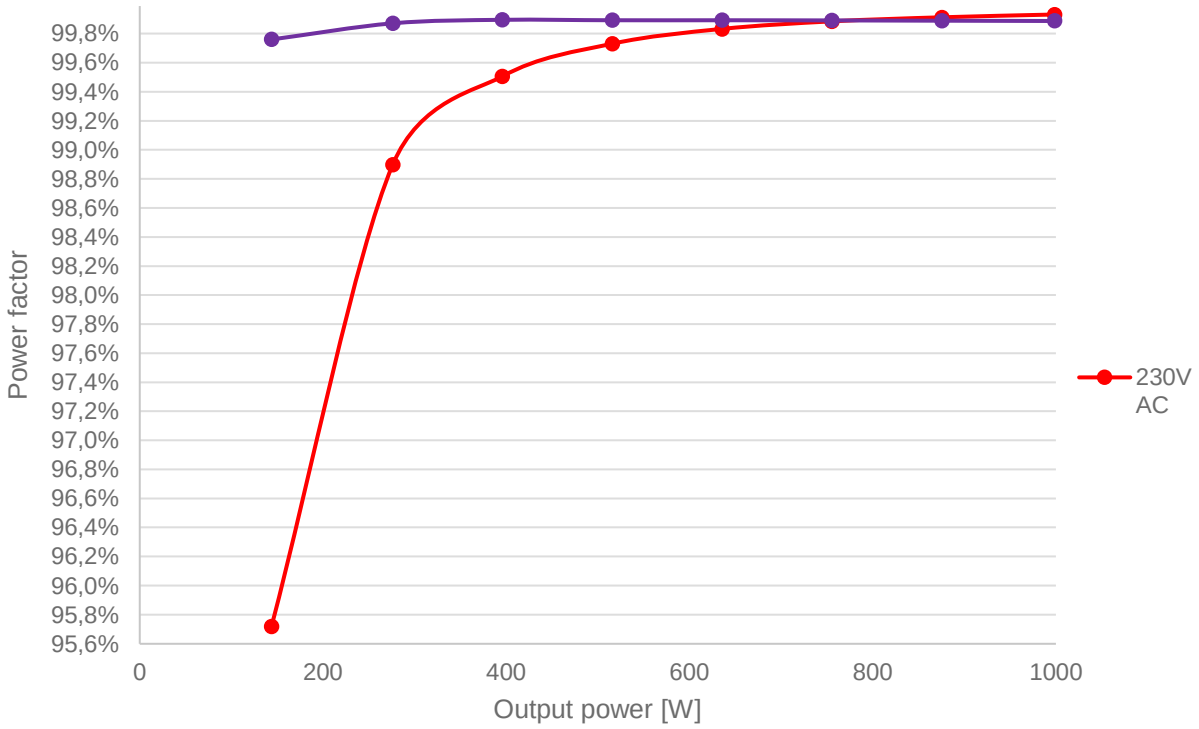

THD [%]

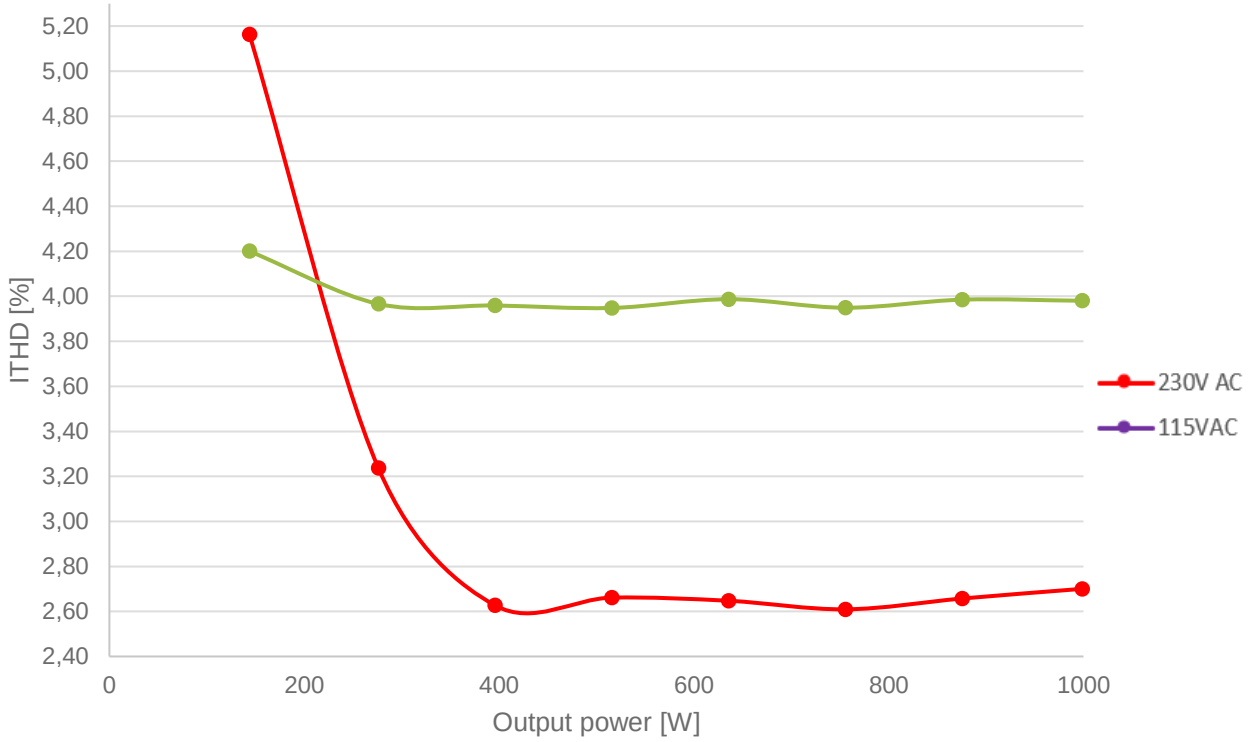

1kW PSU – Thermal characterization at 115V AC at 100% of load (SiC)

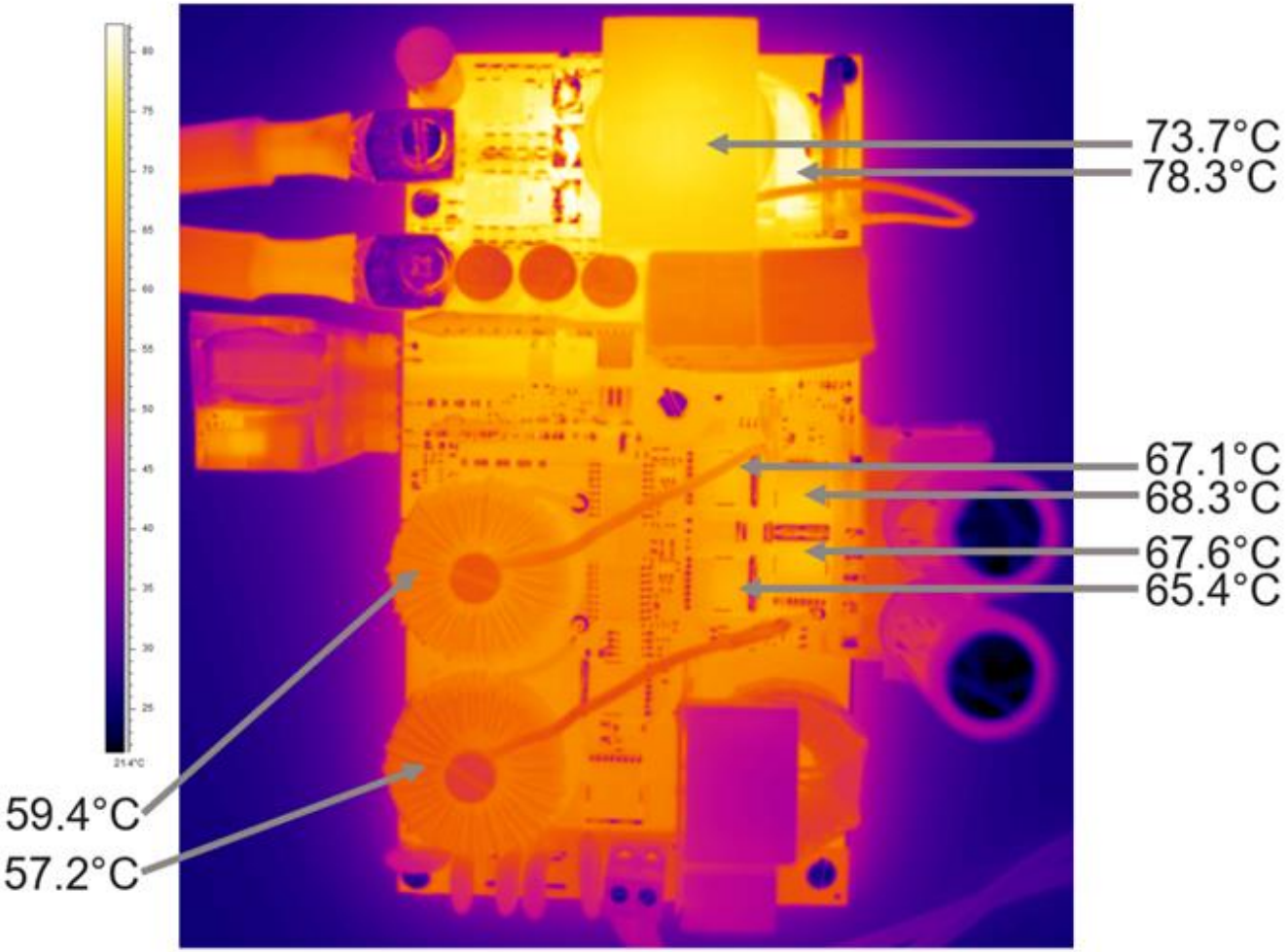

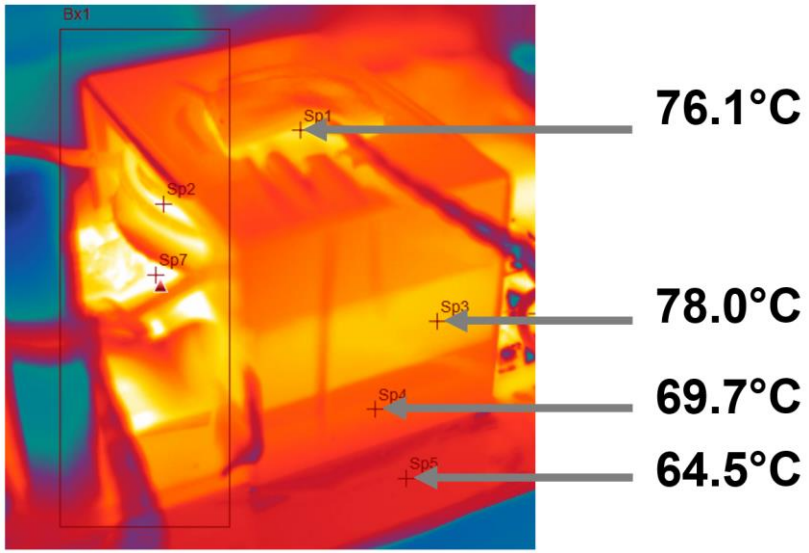

1kW PSU – Thermal characterization at 115V AC at 100% of load (GaN)

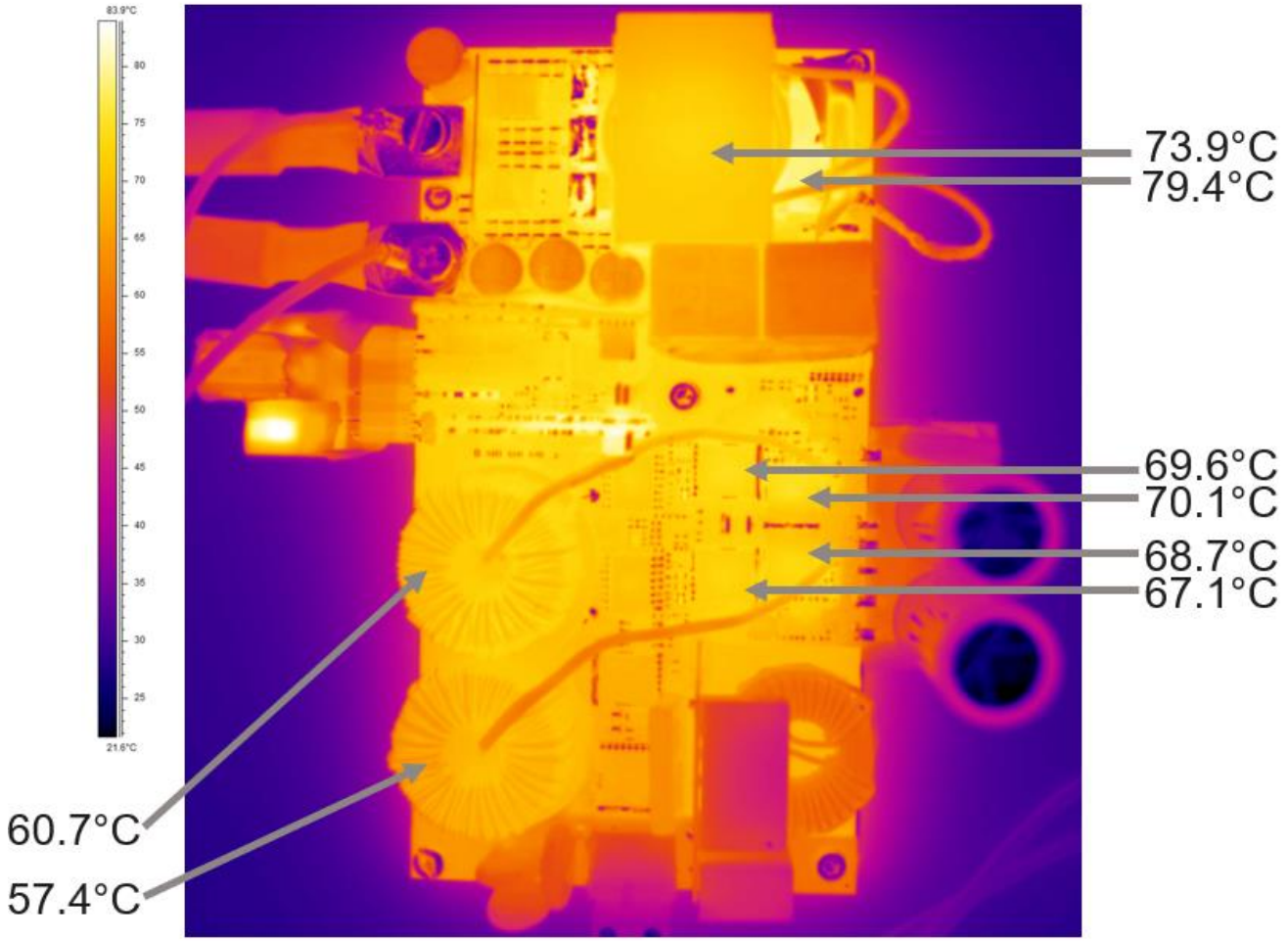

1kW PSU – EMC: Setup

- EMI measurements in Villach lab
  - No certified set-up
- Lab set-up as shown in figure:
  - LISN between DUT and AC source
  - Spectrum analyzer
  - Resistive load









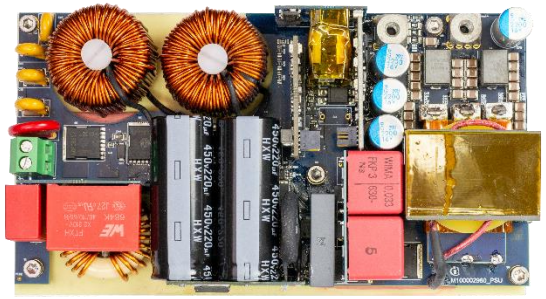

1kW PSU – EMC: Class A limits(SiC Version)

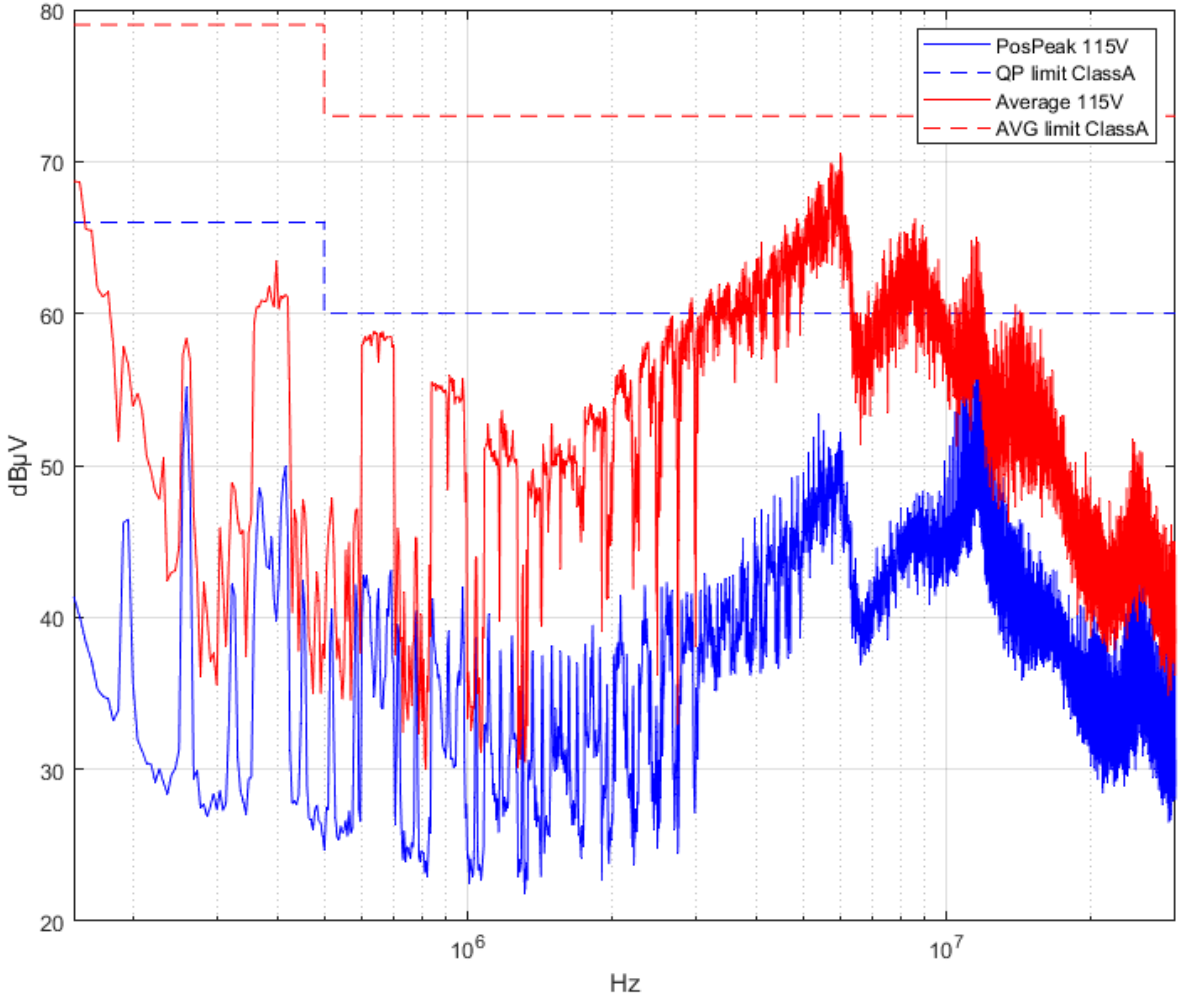

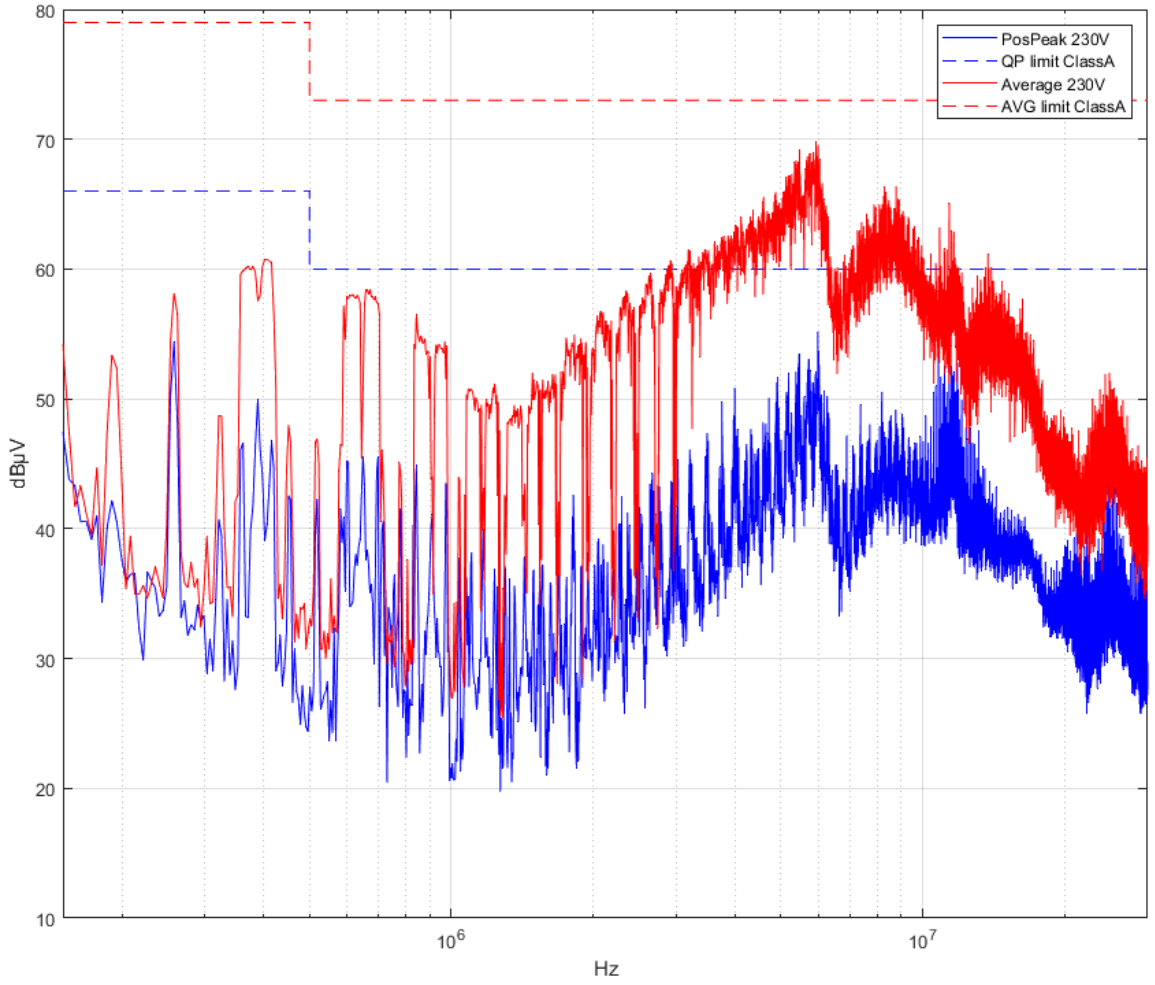

1kW PSU – EMC: Class A limits(GaN Version)

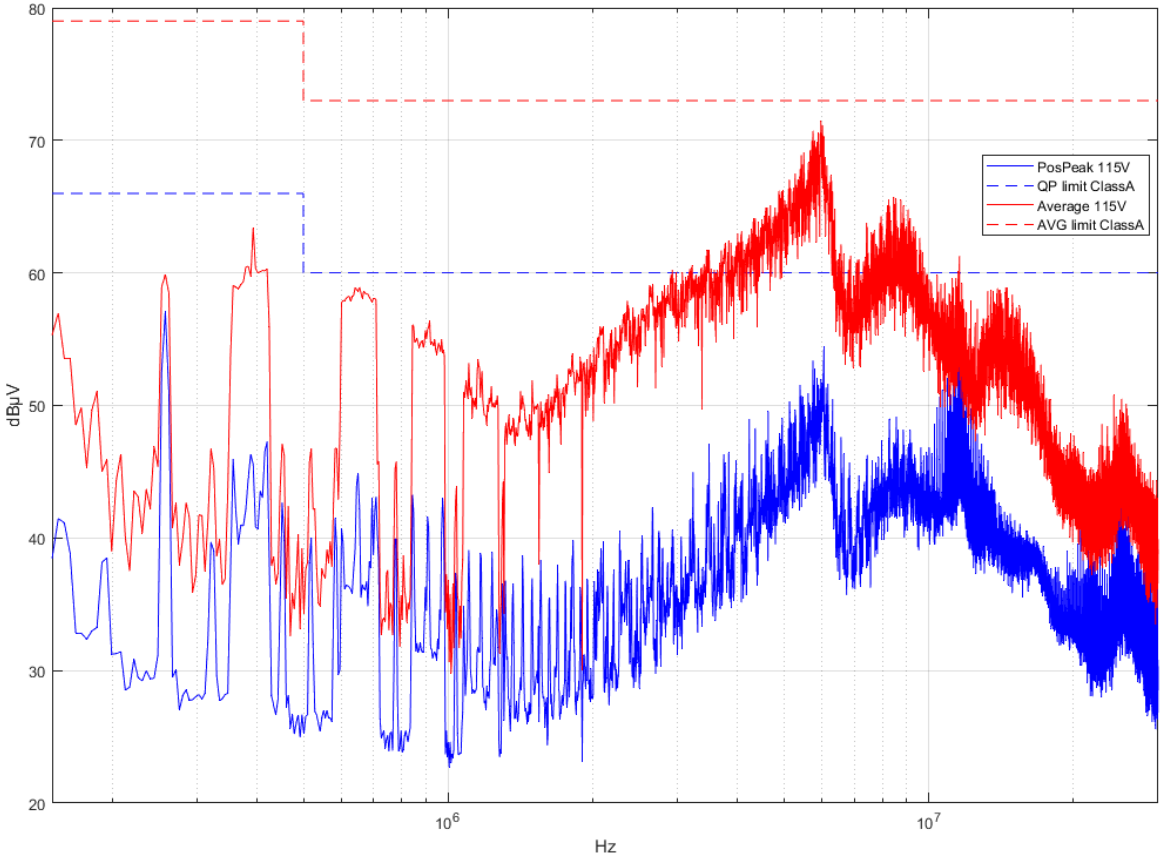

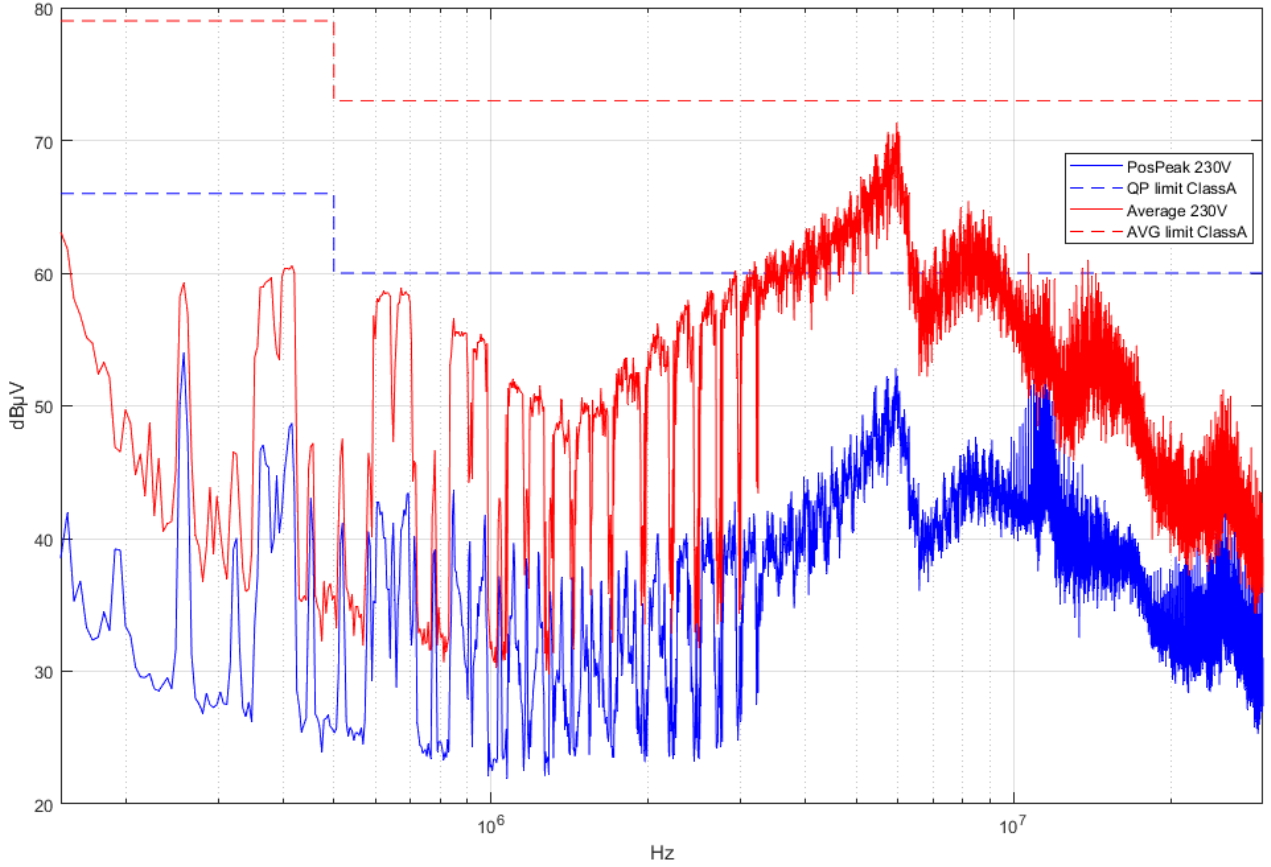


Infineon